PAS 13:2017

Code of practice for safety barriers used in traffic management within workplace environments with test methods for safety barrier impact resilience

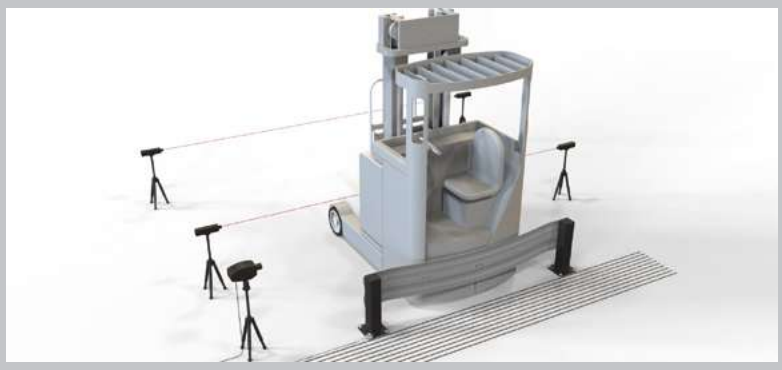

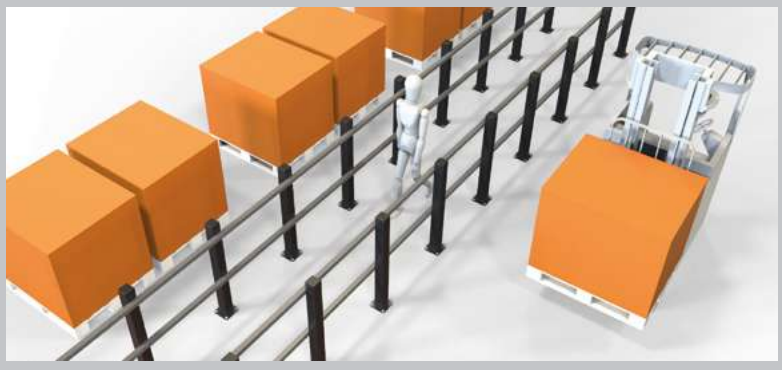

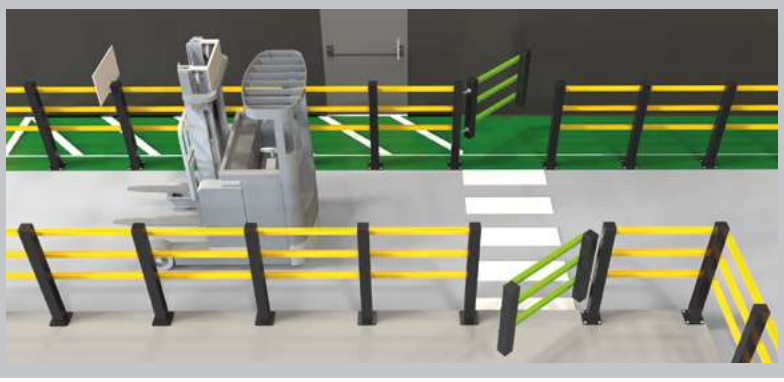

A-SAFE Est. 1984

asafe.com

bsi.

Publishing and copyright information

The BSI copyright notice displayed in this document indicates when the document was last issued.

© The British Standards Institution 2017. Published by BSI Standards Limited 2017.

ISBN 978 0 580 87605 9

ICS 91.140.01

No copying without BSI permission except as permitted by copyright law.

Publication history

First published 2017

Contents

Foreword iv

Introduction v

1 Scope 1

2 Normative references 2

3 Terms and definitions 3

4 Safety barriers used in traffic management within the workplace 6

5 Safety barrier design 13

6 Kinetic energy of vehicles 21

7 Methods of testing the force of impact that a safety barrier can withstand 26

Annexes

Annex A (informative) Emergency exit routes dimensions 43

Annex B (informative) Guidance for typical vehicles in the workplace 44

Annex C (informative) Example of a test barrier report 45

Bibliography 46

List of figures

Figure 1 – Example floor plan of a workplace 6

Figure 2 – Control measures for pedestrian routes, walkways and work area zones 8

Figure 3 – Example of control measures for vehicle routes 10

Figure 4 – Example of control measures for crossing points 11

Figure 5 – Example of control measures for critical structures and equipment 12

Figure 6 – Example of correct and incorrect safety barrier heights 13

Figure 7 – Ground level protection and dimensions 14

Figure 8 – Safety barrier colours 15

Figure 9 – A pedestrian safe zone and deflection zone 16

Figure 10 – Correct and incorrect safety barriers deformation and deflection zones 16

Figure 11 – Correct and incorrect examples of safety barriers next to structures including the deflection zone 17

Figure 12 – Hand rail height for pedestrians 18

Figure 13 – Safety barriers with smooth and sharp edges 18

Figure 14 – Correct and incorrect sized and positioned safety barriers 19

Figure 15 – Force on barrier in relation to the pull out force of a fixture system 19

Figure 16 – Vehicle lined up at different angles to a safety barrier 22

© The British Standards Institution 2017

Figure 17 – A vehicle in an aisle and the calculation of its maximum impact angle 23
Figure 18 – Vehicle impacting a safety barrier at 45 ° 25
Figure 19 – Example of a bumper striker 27
Figure 20 – Example of a two-fork striker dimensions 28
Figure 21 – Example of a safety barrier drawing and specification sheet 29
Figure 22 – Example of a test barrier (using pendulum equipment) with lines marked on the ground to measure deflection 30
Figure 23 – Examples of where to impact safety barrier components 31
Figure 24 – Example of a pendulum using a bumper striker 32
Figure 25 – Example of pendulum test with the striker at 90 ° against the test barrier 33
Figure 26 – Example of pendulum impact test and cross section 35
Figure 27 – Example of a vehicle used in a vehicle impact test 36
Figure 28 – Example of a vehicle impact test preparation area 37
Figure 29 – Example of a vehicle impacting a test barrier 38
Figure 30 – Example of a sled and ramp 39
Figure 31 – Example of a ramp and sled impact test preparation area 40
Figure 32 – Example of a sled impacting a test barrier 41
Figure B.1 – Vehicle impact angles in particular aisle widths 44
Figure B.2 – Energy that is transferred to a safety barrier by vehicles at different angles 44

List of tables

Table A.1 – Widths of escape routes and exits 43
Table C.1 – Example test barrier report 45

© The British Standards Institution 2017

Foreword

This PAS was sponsored by A-Safe (UK) Ltd. Its development was facilitated by BSI Standards Limited and published under licence from The British Standards Institution. It came into effect on 28 February 2017.

Acknowledgment is given to the following organizations that were involved in the development of this PAS as members of the Steering Group.

- Allianz Insurance
- British Industrial Truck Association
- DHL
- Health and Safety Executive
- Jaguar Land Rover
- Mars Cares & Treats
- Nestle Purina PetCare
- RIBA Enterprises
- STOMMPY Srl
- The University of Manchester, School of Mechanical, Aerospace and Civil Engineering
- TUV UK Ltd
- Wickens Engineering Ltd

Acknowledgment is also given to the members of a wider review panel who were consulted in the development of this PAS.

The British Standards Institution retains ownership and copyright of this PAS. BSI Standards Limited as the publisher of the PAS reserves the right to withdraw or amend this PAS on receipt of authoritative advice that it is appropriate to do so. This PAS will be reviewed at intervals not exceeding two years, and any amendments arising from the review will be published as an amended PAS and publicized in *Update Standards*.

This PAS is not to be regarded as a British Standard. It will be withdrawn upon publication of its content in, or as, a British Standard.

The PAS process enables a code of practice to be rapidly developed in order to fulfil an immediate need in industry. A PAS can be considered for further development as a British Standard, or constitute part of the UK input into the development of a European or International Standard.

Use of this document

As a code of practice, this PAS takes the form of guidance and recommendations. It should not be quoted as if it were a specification and particular care should be taken to ensure that claims of compliance are not misleading.

Any user claiming compliance with this PAS is expected to be able to justify any course of action that deviates from its recommendations.

It has been assumed in the preparation of this PAS that the execution of its provisions will be entrusted to appropriately qualified and experienced people, for whose use it has been produced.

Information about this document

Product certification/inspection/testing. Users of this PAS are advised to consider the desirability of third-party certification/inspection/ testing of product conformity with this PAS. Users seeking assistance in identifying appropriate conformity assessment bodies or schemes may ask BSI to forward their enquiries to the relevant association.

Assessed capability. Users of this PAS are advised to consider the desirability of quality system assessment and registration against the appropriate standard in the BS EN ISO 9000 series by an accredited third-party certification body.

Presentational conventions

The provisions of this standard are presented in roman (i.e. upright) type. Its recommendations are expressed in sentences in which the principal auxiliary verb is "should".

Commentary, explanation and general informative material is presented in smaller italic type, and does not constitute a normative element.

© The British Standards Institution 2017

The word "should" is used to express recommendations of this standard. The word "may" is used in the text to express permissibility, e.g. as an alternative to the primary recommendation of the clause. The word "can" is used to express possibility, e.g. a consequence of an action or an event.

Notes and commentaries are provided throughout the text of this standard. Notes give references and additional information that are important but do not form part of the recommendations. Commentaries give background information.

Contractual and legal considerations

This publication does not purport to include all the necessary provisions of a contract. Users are responsible for its correct application.

Compliance with a British Standard cannot confer immunity from legal obligations.

© The British Standards Institution 2017

0 Introduction

0.1 Background

Health and safety statistics show that approximately 50 people are killed each year and more than 5 000 injured in accidents involving workplace transport [1].

Each workplace is unique and likely to present different hazards and risks. However, a well-designed and maintained workplace with proper segregation of vehicles and people will experience fewer workplace accidents [2].

The most effective way of ensuring pedestrians and vehicles move safely around a workplace is to provide separate pedestrian and vehicle traffic routes and, where necessary, implement barriers, rails and signage to prevent pedestrians crossing at dangerous places and to direct them to safer crossing points [2].

There is a lot of information from safety organizations about workplace transport. The Health and Safety Executive (HSE) states that workplace transport means any vehicle or piece of mobile equipment used in any work setting [3]. Segregation of pedestrians and vehicles is advised but the way to achieve this can only be determined by assessing all of the site-specific issues and risks.

Warehousing and storage, a guide to health and safety (HSE) states [3]: "*Warehouses should be designed and laid out to allow for the safe movement of goods, materials and people. Good design and layout can help reduce accidents, including those involving vehicles and people slipping and tripping*."

The movement of goods and materials involves the use of a wide range of vehicles and accounts for a large proportion of accidents in the workplace. It is important to have a safe system of traffic management, including methods and procedures for arrival, reception, unloading, loading and movement of vehicles within the workplace. People and vehicles should be segregated as far as is "reasonably practicable".[1)]

Mixing vehicles and pedestrians increases the risk of potential accidents, so it is imperative that steps are taken to minimize the associated risks by applying the following:

- Separate pedestrian activities from areas where vehicles are operating, where reasonably practical.
- Define, designate and clearly mark pedestrian routes and crossing places.
- Use protective barriers and traffic management procedures to control the movement of vehicles and pedestrians.

PAS 13 outlines the current good practice traffic management procedures for a workplace and provides a standard for the safety barriers within them.

Frequently asked questions after determining the requirement for pedestrian and vehicle segregation include:

- What type of protection or safety barrier are to be used?
- When is a vehicle barrier, pedestrian barrier or white line used?
- Is the current protection or safety barrier fit for purpose?

PAS 13 provides recommendations for these questions and give further understanding on how the selected protection may be rated and meet a specification and a performance rating by use of a test method. The test method element of the PAS describes dynamic impact tests and barrier performance measurement.

[1)] Health and Safety Executive, ALARP "at a glance", 2014, *www.hse.gov.uk/risk/theory/alarpglance.htm.*

© The British Standards Institution 2017

0.2 Main clauses

This PAS is divided into four main clauses that describe the testing and implementation of safety barriers, and best traffic management practices.

1) **Clause 4: Safety barriers used in traffic management within the workplace**
   - How safety barriers can be used to assist in the safe management of workplace traffic.

2) **Clause 5: Safety barrier design**
   - Principles of safety barrier design for individual applications and environments.

3) **Clause 6: Kinetic energy of vehicles**
   - How to calculate the impact kinetic energy of vehicles in a workplace. Once this potential energy is determined, safety barriers that withstand the impacts of specific vehicles can be selected.

4) **Clause 7: Methods of testing the force of impact that a safety barrier can withstand**
   - How to test, measure and rate a safety barrier for use within a workplace environment, with clear pass or fail criteria.

© The British Standards Institution 2017

1 Scope

This PAS gives recommendations for the impact resilience, dimensions and positions of safety barriers in the workplace, and guidance on how to manage the risks associated with vehicles within the workplace, and specifies the criteria for testing the impact resilience of a barrier.

It is applicable to safety barriers used where there is a risk of collision between workplace vehicles or machinery and pedestrians. It is intended to be used by those who are concerned with selecting the appropriate safety barrier for their workplace to protect personnel, vehicles and structures, those who want to apply traffic management procedures and those who test and measure the performance of safety barriers.

It may also be of interest to manufacturers and distributors of safety barriers.

This PAS does not cover:

- highways and public environments;
- an installation specification or installation guide for safety barriers;
- safety barriers when working at height regulations.

Traffic and pedestrian routes do not cover stairs, staircases and fixed ladders.

© The British Standards Institution 2017

2 Normative references

The following documents, in whole or in part, are normatively referenced in this document and are indispensable for its application. For dated references, only the edition cited applies. For undated references, the latest edition of the referenced document (including any amendments) applies.

BS 5080, *Structural fixing in concrete and masonry – Method of test for tensile loading*

BS EN 1672-2, *Food processing machinery – Basic concepts – Hygiene requirements*

© The British Standards Institution 2017

3 Terms and definitions

For the purpose of this PAS, the following terms and definitions apply:

3.1 arrest

barrier stopping and containing a striker without failure

3.2 catastrophic failure

failure of a barrier to arrest a striker, or structural failures within the barrier, fixture systems and structural components assessed via visual analysis

NOTE *Examples include fixture systems pulled out of the substrate, sheared fixture systems, and sheared structural components. Catastrophic failure excludes sacrificial parts.*

3.3 competent person

person with sufficient experience, knowledge and training to perform the task

3.4 critical structures and equipment

structurally integral parts of a workplace

NOTE *Examples include building columns, walls, racking, doors, machinery, sprinkler systems, shelving, etc.*

3.5 crossing point

location within the workplace environment where a pedestrian may move across a vehicle area

3.6 deflection

movement occurring in barriers during impact

3.7 deflection zone

area identified to allow barrier deformation without impinging on pedestrian safe zone

3.8 desire line

naturally-preferred route a pedestrian takes across a workplace environment

3.9 end post

first and last posts in a run of barriers

3.10 engineering drawing

technically-detailed graphic depiction of a barrier

3.11 environment

"off-highway" work areas that are not on the road

NOTE *This includes any "off-highway" workplace such as factories, warehouses, airports, logistic centres, etc.*

3.12 fixture system

system that anchors or fixes a barrier to the floor

3.13 floor plan

graphic representation of a workplace showing pedestrian and vehicle zones, structures and equipment

3.14 high-speed camera

specialist camera for photographing high-velocity impacts

3.15 impact angle

specific angle of approach between a vehicle and barrier

3.16 kinetic energy

energy an object possesses due to its motion

NOTE *Measured in joules (J) or Newton metres (Nm).*

© The British Standards Institution 2017

3.17 load cell

device to measure and display force

***NOTE** For example a display of the force measured on the fixture systems during an impact test.*

3.18 loading and unloading zone

area within a workplace where items are placed on or taken for the purpose of transfer

3.19 manual and non-motorized vehicle

hand-powered machinery in a workplace

***NOTE** Examples includes vehicles, hand pallet trucks, warehouse carts, roll cages and platform trucks, etc.*

3.20 mid-post

post connecting two aligned rails

3.21 pedestrian

person moving and located within and around the workplace environment

3.22 pedestrian buffer zone

defined zone between pedestrian walkway and traffic route

3.23 pedestrian safe zone

area in workplace where traffic is not permitted, such as walkways or work areas

3.24 personnel

all people within the workplace

***NOTE** Examples includes pedestrians, vehicle drivers, people in work area zones, etc.*

***NOTE** Examples includes mass and height of a striker.*

3.25 rail

component, generally horizontal in alignment, that is connected between two or more posts

3.26 raised kerb

elevated edge that can be used for traffic or pedestrian guidance

3.27 sacrificial part

part designed to fail in a safe and controlled manner

3.28 safety barrier

workplace protection item

***NOTE** Examples include hand rails, pedestrian barriers, guard rails, traffic barriers, crash barriers, vehicle barriers, racking barriers and bollards.*

3.29 safety net

protection item placed around a test barrier to capture flying debris following striker impact

3.30 scales

accurate and approved calibrated weighing implement

3.31 segregation

separation of vehicles and pedestrians within a workplace

3.32 striker

object or vehicle that impacts a barrier

3.33 structures

integral support or framework of a building

***NOTE** For example walls, doorways, floors, columns, racking legs, etc.*

3.34 target

visible position marked for impact on a test barrier

3.35 test area

location where performance measurements are made on test barriers

© The British Standards Institution 2017

3.36 test barrier

safety barrier used specifically for test purposes

3.37 traffic management

procedures for the safe guidance of vehicles and protection of personnel within a workplace environment

3.38 vehicle

moving equipment within the workplace environment

NOTE *For example cars, trucks, forklift trucks, mobile plant, cherry pickers, buses, wagons, etc.*

3.39 velocity

object's speed, measured in mp/s (metres per second), and its moving direction

NOTE *Examples of objects are strikers, workplace vehicles, etc.*

3.40 walkway

route within the work environment specifically for the movement of pedestrians

3.41 work area zone

general area within a workplace where workers are present

3.42 workplace

general place of work

NOTE *For example, warehouse, car park, factory, airport, etc.*

© The British Standards Institution 2017

4 Safety barriers used in traffic management within the workplace

4.1 General

NOTE *Traffic management involves the safe movement of vehicles and pedestrians through and around the workplace. This clause provides recommendations on when and where to use safety barriers to effectively manage health and safety risks associated with workplace traffic.*

4.2 Assessing risks using a work area plan

A floor plan of the workplace should be drafted to include the following:

a) pedestrian routes and walkways;

b) pedestrian zones and work areas;

c) vehicle routes;

d) pedestrian crossing points;

e) critical structures and equipment;

f) vehicle parking areas; and

g) loading and unloading zones.

NOTE *An example is given in Figure 1.*

Figure 1 – Example floor plan of a workplace

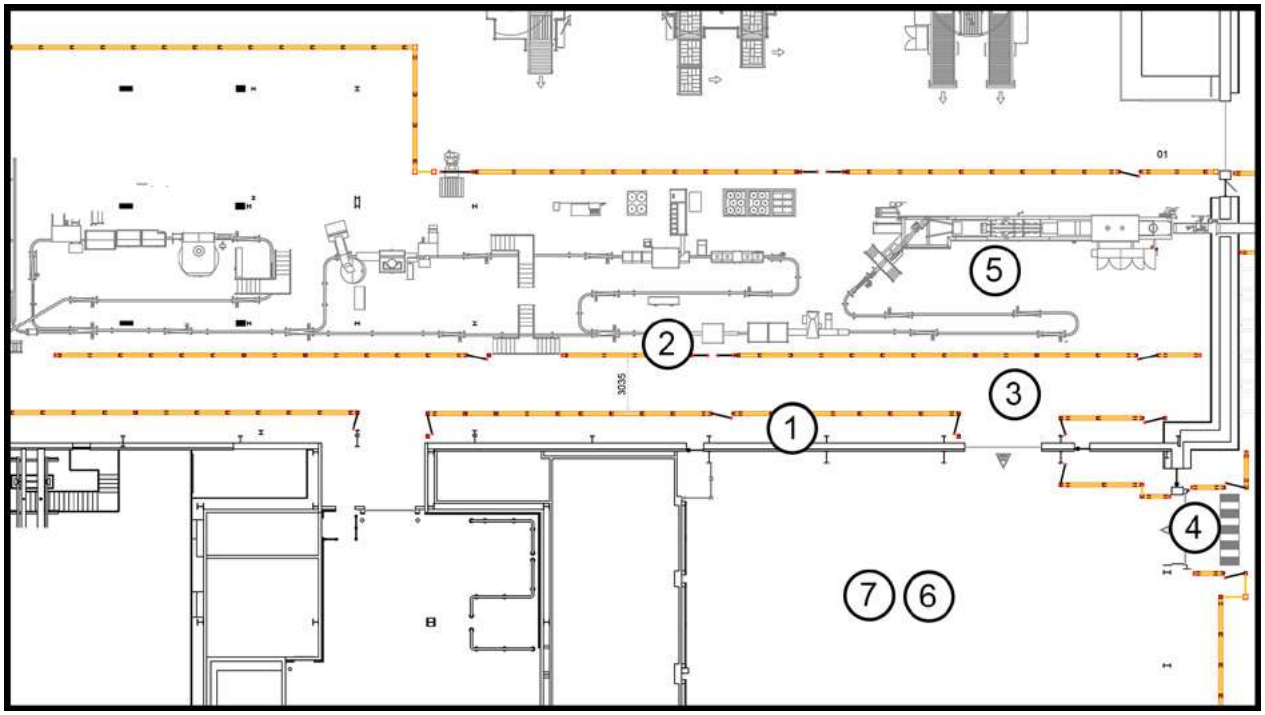

Key:

1. Pedestrian routes and walkways
2. Pedestrian zones and work areas
3. Vehicle routes
4. Pedestrian crossing points
5. Critical structures and equipment
6. Vehicle parking areas
7. Loading and unloading zones

© The British Standards Institution 2017

***NOTE** The floor plan allows evaluation of each element for risks, and to assess:*

a) the severity of the risks;

b) whether existing control measures are effective;

c) the action to take to control the risks; and

d) the urgency required to control the risks.

4.3 Control measures

Control measures should be ranked and implemented using the following hierarchical list:

a) eliminate the hazard;

***NOTE** It is most efficient to eliminate hazards when a workplace is first planned out.*

b) substitute with something safer;

***NOTE** For example automated equipment.*

c) isolate the hazard from pedestrians;

***NOTE** For example segregate vehicles and pedestrians.*

d) improve the workplace design and layout around vehicles and critical structures;

e) use engineering controls such as speed limiters on vehicles;

f) install administrative controls;

***NOTE** For example, signs and marked areas.*

g) use personal protective equipment (PPE);

***NOTE** For example, high-visibility clothing.*

h) information/instruction/training for both pedestrians and plant operators.

4.4 Reviewing control measures

Controls should be continually reviewed to determine whether:

a) the control measures are effective;

b) there been any changes to the environment;

c) the controls have created any new problems;

d) the procedures have being followed correctly;

e) there have been improvements to health and safety; and

***NOTE** For example, accidents and near misses have been reduced.*

f) there are lessons to be learnt from accident, incident and near miss reports and have these been applied.

4.5 Pedestrian routes, walkways and work area zones

4.5.1 Assessing and evaluating

The current pedestrian traffic routes and walkways should be assessed and evaluated as follows:

a) Do the pedestrian routes correspond to the desire lines?

b) Can the pedestrian routes be placed where no vehicle traffic occurs?

c) Are walkways wide enough for pedestrian and wheelchair accessibility?

***NOTE 1** See **5.9** and Table A.1 when assessing the minimum width of a pedestrian walkway that is leading to an emergency exit.*

***NOTE 2** Walkway widths may be subject to regional variations in building regulations.*

© The British Standards Institution 2017

4.5.2 Control measures for pedestrian routes, walkways and work area zones

4.5.2.1 Where vehicles and pedestrians cannot be segregated, pedestrian routes should have the following control measures, as shown in Figure 2:

a) a walkway or pedestrian zone of a minimum width of 600 mm;

b) wheelchair access of a minimum width of 1 200 mm;

c) when a safety barrier is used, the maximum deflection of the barrier is added to the width of the pedestrian zone;

d) pedestrian areas are entirely free from vehicles;

e) workplaces are designed so there is no need for a vehicle to enter a pedestrian zone;

f) clear markings and signs are used to set vehicle and pedestrian areas apart;

g) raised kerbs are used to better define the traffic and pedestrian routes;

h) coloured walkways are used to better define pedestrian routes;

i) an opportunity is provided to allow for the adjustment of vision when moving from one extreme of lighting to another, e.g. from outside to inside a building.

Figure 2 – Control measures for pedestrian routes, walkways and work area zones

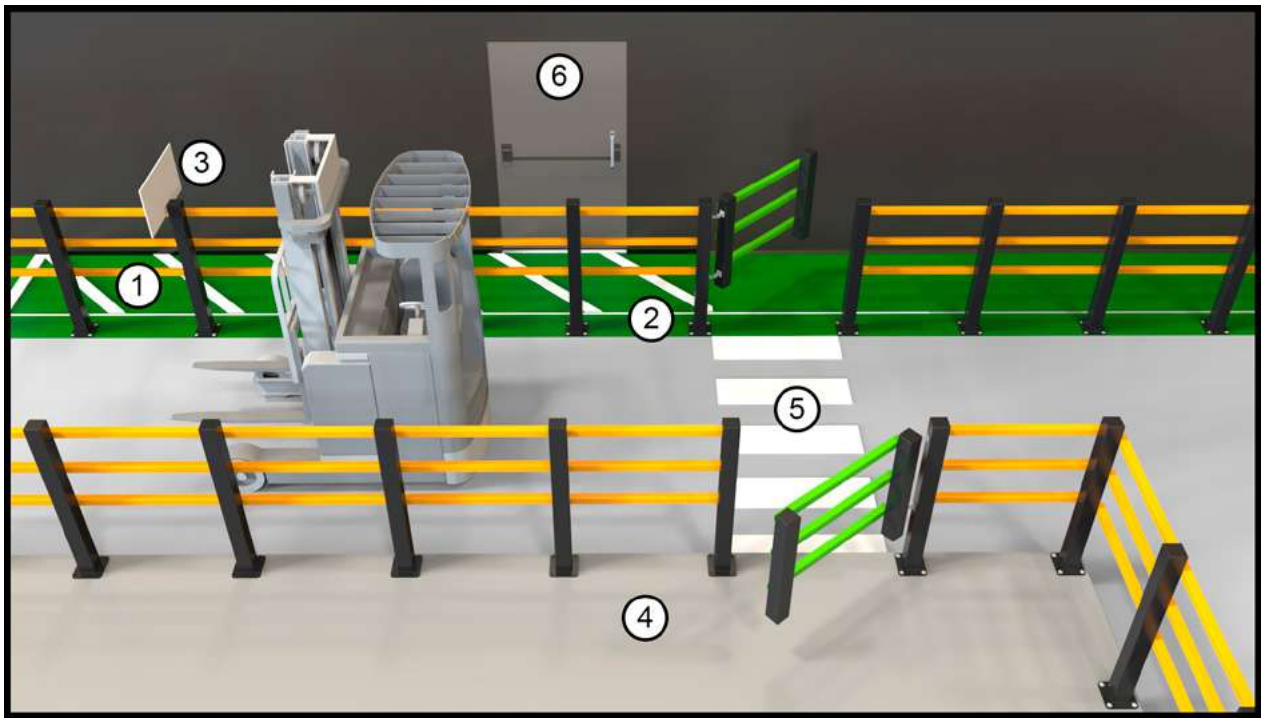

Key:
1. Pedestrian walkway zone coloured green
2. Deflection zone added to the pedestrian zone marked with a white line
3. Signage to mark and identify separate pedestrian and traffic routes
4. Raised kerb to define traffic and pedestrian routes
5. Marked crossing point with a green pull gate and offset doorway
6. Entrance doorway

© The British Standards Institution 2017

4.5.2.2 A safety barrier that conforms to the recommendations in this PAS (see **Clause 5**) should be used to segregate pedestrians and vehicles in the following circumstances:

a) when motorized vehicles are in operation;

b) when there is no raised kerb;

c) when the vehicle route is closer than 1 m to the pedestrian zone or walkway.

NOTE 1 *Markings such as white lines may be used for segregation in the following circumstances:*

a) when manual and non-motorized vehicles are in operation;

b) when raised kerbs and vehicles routes are over 1m away from the pedestrian zone or walkway.

NOTE 2 *The 1 m area next to the pedestrian zone is called a pedestrian buffer zone.*

4.5.2.3 Pedestrian barriers should be used at entrance points to prevent pedestrians walking in front of vehicles.

4.5.2.4 Doorway entrances should never open up to a pedestrian crossing point.

NOTE 1 *This stops pedestrians walking straight into a vehicle route without thinking and looking.*

NOTE 2 *Green gates or markings help define exit points from pedestrian zones.*

4.5.2.5 Gates should open towards the pedestrian to create a pause in pedestrian movement before leaving the pedestrian zone.

4.5.2.6 Pedestrian routes should be planned to correspond to the natural desire lines across the site.

NOTE 1 *This encourages pedestrians to stay on the designated safe routes and avoid potentially hazardous shortcuts.*

NOTE 2 *Emergency exits may be designed to be directly opposite a pedestrian crossing point to enable a fast exit.*

4.5.2.7 When desire lines cannot be used, a safety barrier should be used to stop pedestrians taking shortcuts and ensuring they stick to the walkway.

NOTE *Strategically-placed mirrors can help pedestrians and vehicles see each other. Audible and/or visible warning devices, activated by movement, can help alert vehicle operators and pedestrians to each other's presence.*

4.6 Vehicle routes

4.6.1 Assessing and evaluating

Assessment and evaluation of vehicle routes should be carried out by:

a) defining the pedestrian zones that are nearest to the traffic route; and

b) reviewing the suitability of the traffic route.

4.6.2 Control measures for vehicle routes

Vehicle traffic routes should be, if possible:

a) free from pedestrians;

b) defined by safety barriers which are placed in position to guide vehicles;

c) a one-way system designed/organized to minimize the need for reversing and with adequate passing space around stationary vehicles;

d) wide enough for the largest vehicle that uses them;

e) free from sharp or blind bends, as reasonably practicable;

f) constructed from material able to safely bear loads that pass over them;

g) free from steep slopes;

NOTE *If steep slopes cannot be avoided, the slopes are to be signposted.*

h) well-maintained and free from obstructions; and

i) marked with correct health and safety signage.

NOTE *Figure 3 shows an example of such traffic routes.*

© The British Standards Institution 2017

Figure 3 – Example of control measures for vehicle routes

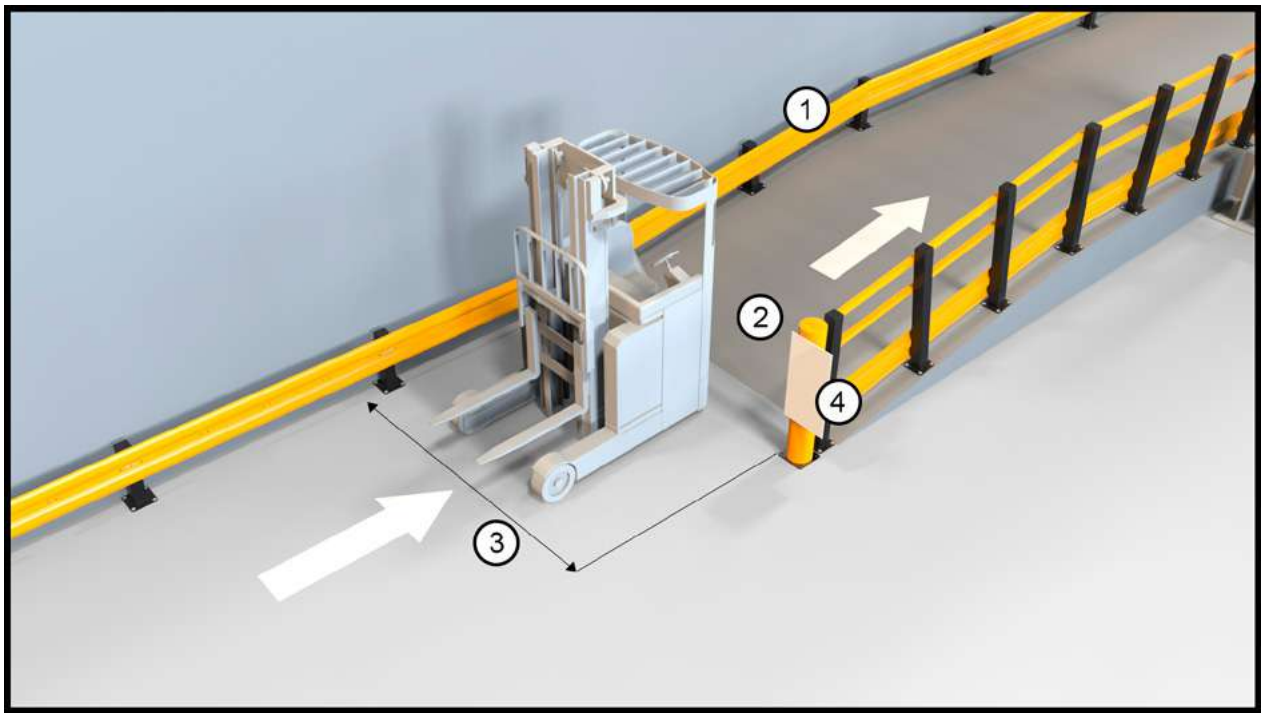

Key:
1. Defined safety barriers
2. Markings of a one-way system for vehicles
3. Vehicle aisle width
4. Signposted slope

4.7 Crossing points

4.7.1 Assessing and evaluating crossing points

A crossing point is a critical area where a pedestrian and vehicle route cross; this should be assessed in the following ways:

a) How many crossing points are there and can the traffic routes be organized to reduce or eliminate crossing points?

b) Are crossing points properly managed to eliminate risks?

c) Are crossing points clearly visible?

4.7.2 Control measures for crossing points

Traffic routes and work areas should be designed to eliminate or reduce crossing points to a minimum and then managed in the following ways:

a) use of overhead walkways, where possible;

b) crossing points made highly visible, using ground markings, lights and signs;

c) crossing points positioned where they are clearly visible for both pedestrians and vehicle drivers;

d) safety barriers positioned around the crossing point with pull gates;

e) entrance doorways not positioned directly opposite crossing points; and

f) crossing points designed so pedestrians pause and consider before moving through them.

NOTE 1 *Figure 4 shows an example of some of these control measures.*

NOTE 2 *Traffic light systems may be used to manage the flow of vehicles and pedestrians.*

NOTE 3 *A fire exit may be positioned opposite a crossing point.*

© The British Standards Institution 2017

Figure 4 – Example of control measures for crossing points

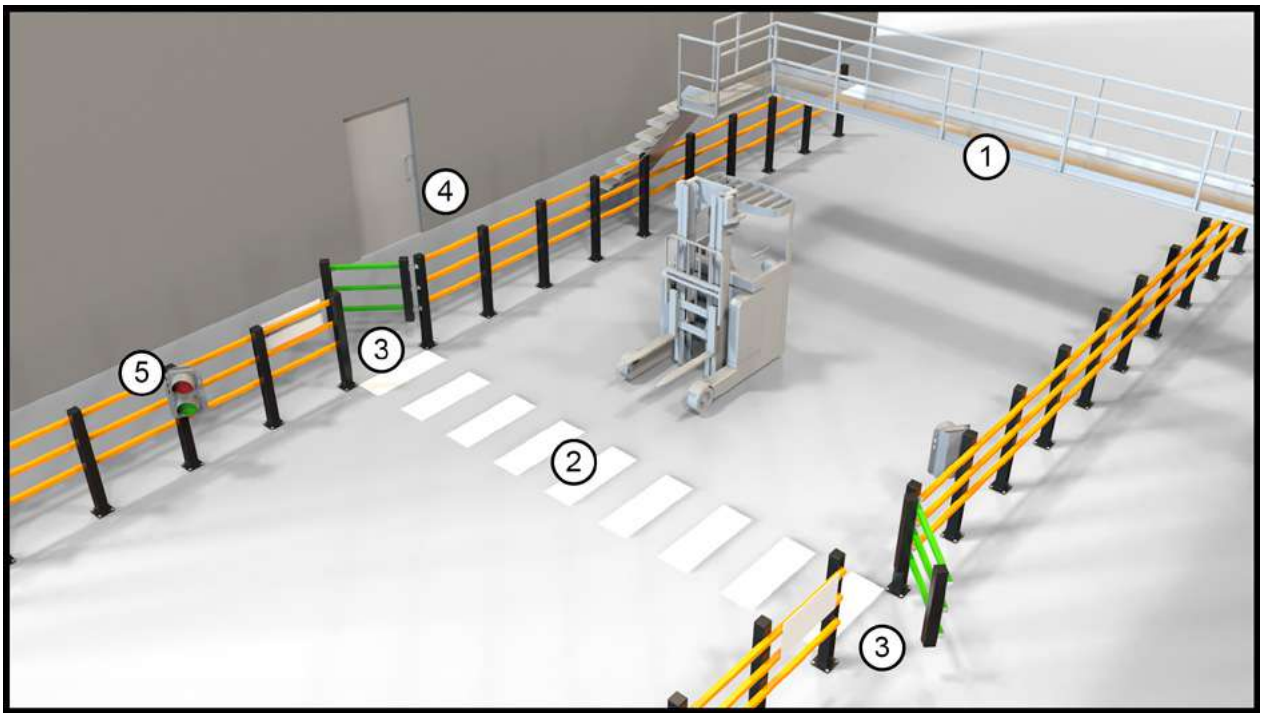

Key:
1. Overhead walkway
2. Marked crossing point
3. Pull gates at the crossing point to create a pause effect
4. Entrance doorway where the crossing point is offset to create a pause effect
5. Traffic light system to manage vehicle and pedestrian flow

4.8 Critical structures and equipment

4.8.1 Assessing and evaluating critical structures and equipment

4.8.1.1 Identification and location of critical structures and equipment within the workplace should be established.

4.8.1.2 The traffic and vehicle routes in conjunction with the critical structures and equipment should then be defined.

4.8.2 Control measures for critical structures and equipment

Whenever possible, vehicles and vehicle routes should be moved away from any critical structure or equipment. If this is not possible critical structures and equipment should be protected in the following ways:

a) design the workplace layout to reduce the speed of vehicles around the area;

NOTE For example use speed bumps or other layouts and devices to reduce the vehicle speed.

b) where vehicles move near structures and equipment, use an appropriate safety barrier to protect them;

c) use highly visible items such as bollards, signs and ground markings to help guide drivers and identify critical points;

d) use safety barriers or road design to funnel drivers through entrances and doorways and direct vehicles away from critical points, such as door frames;

e) position and use safety barrier designs that help remove sharp corners; and

f) use safety barriers that are not in contact with structures or equipment and position them at distance that takes in consideration impact deflection distance.

NOTE Figure 5 shows an example of some of these control measures.

© The British Standards Institution 2017

Figure 5 – Example of control measures for critical structures and equipment

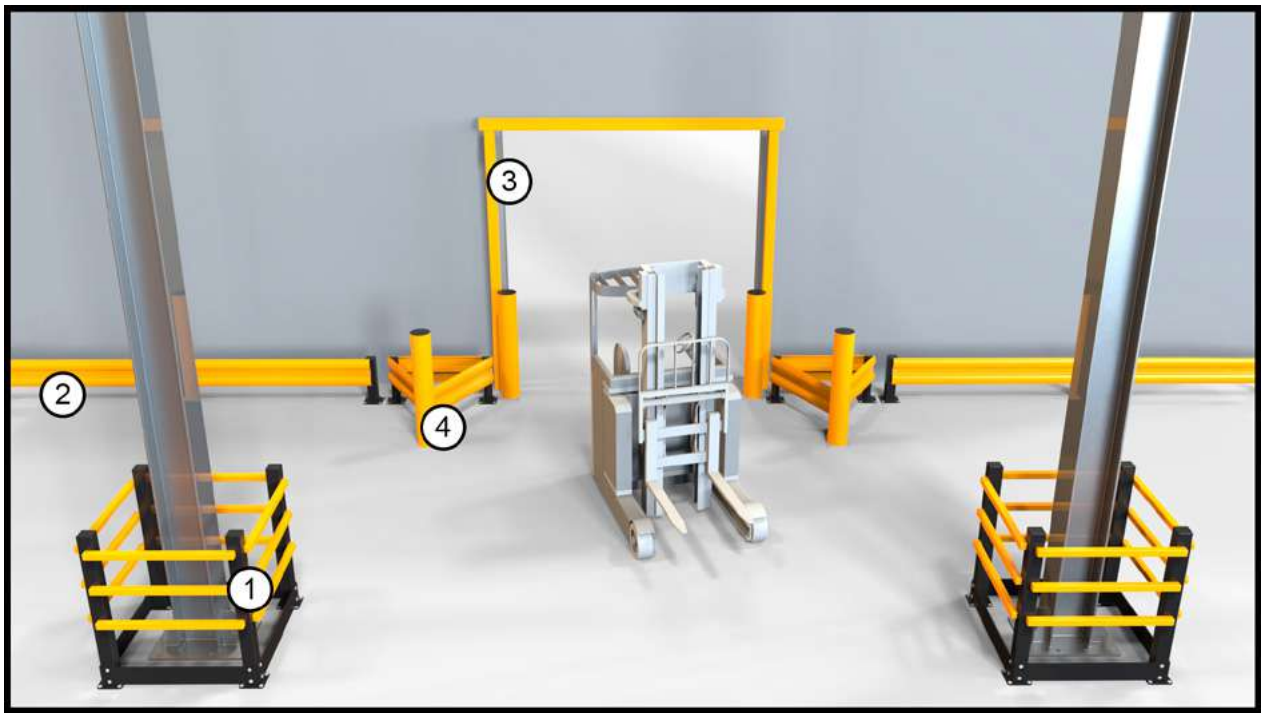

Key:
1. Safety barrier protecting a column structure
2. Safety barrier protecting the wall
3. Safety barrier goal post protecting the doorway and surround
4. Funnel designed safety barrier to guide vehicles through the doorway entrance/exit

4.9 Other areas where safety barriers aid and benefit traffic management

4.9.1 Vehicle parking areas

The location and suitability of commercial and private parking areas should be evaluated to ensure the safest movement of pedestrians and vehicles.

NOTE *Ideally, a pedestrian walkway leads to and from parking areas, using appropriate separation and safety barriers.*

4.9.2 Loading and unloading zones

When operating around loading and unloading zones:

a) wherever possible remove pedestrians from the area;

b) create a pedestrian safe zone next to the vehicle where the driver stays, if it is necessary for drivers to leave a vehicle;

c) segregate pedestrian zones with a safety barrier;

d) manage the situation so pedestrians and moving vehicles are not in the same area at the same time.

© The British Standards Institution 2017

5 Safety barrier design

5.1 A safety barrier should be tested to a performance rating using the dynamic test method described in **Clause 7**. The test should be performed by, or witnessed and supervised by, an independently-accredited test house or accreditation body.

5.2 The selected safety barrier should be manufactured using established documentation and within a maintained factory production quality control system. This factory production quality control system should consist of best practice procedures, regular inspections, routine tests and/or assessments and these results used to control raw or other incoming materials.

NOTE *Attention is drawn to BS EN ISO 9001 or any equivalent quality control system.*

5.3 The environmental temperature of the barrier should reflect the temperature of the test environment.

5.4 A safety barrier height should be at a level where the vehicle can be contained and not ride over the safety barrier.

NOTE *An example is shown in Figure 6.*

Figure 6 – Example of correct and incorrect safety barrier heights

5.5 Ground level protection (as shown in Figure 7), should be provided in the following scenarios where there is risk of a fork or protruding item running against a safety barrier:

a) when a vehicle fork has a 20 m or greater travel run at a safety barrier; and

b) where critical building structures or equipment such as electrical equipment, sprinklers and columns are protected.

5.6 The ground level protection should have a minimum height of 150 mm.

© The British Standards Institution 2017

Figure 7 – Ground level protection and dimensions

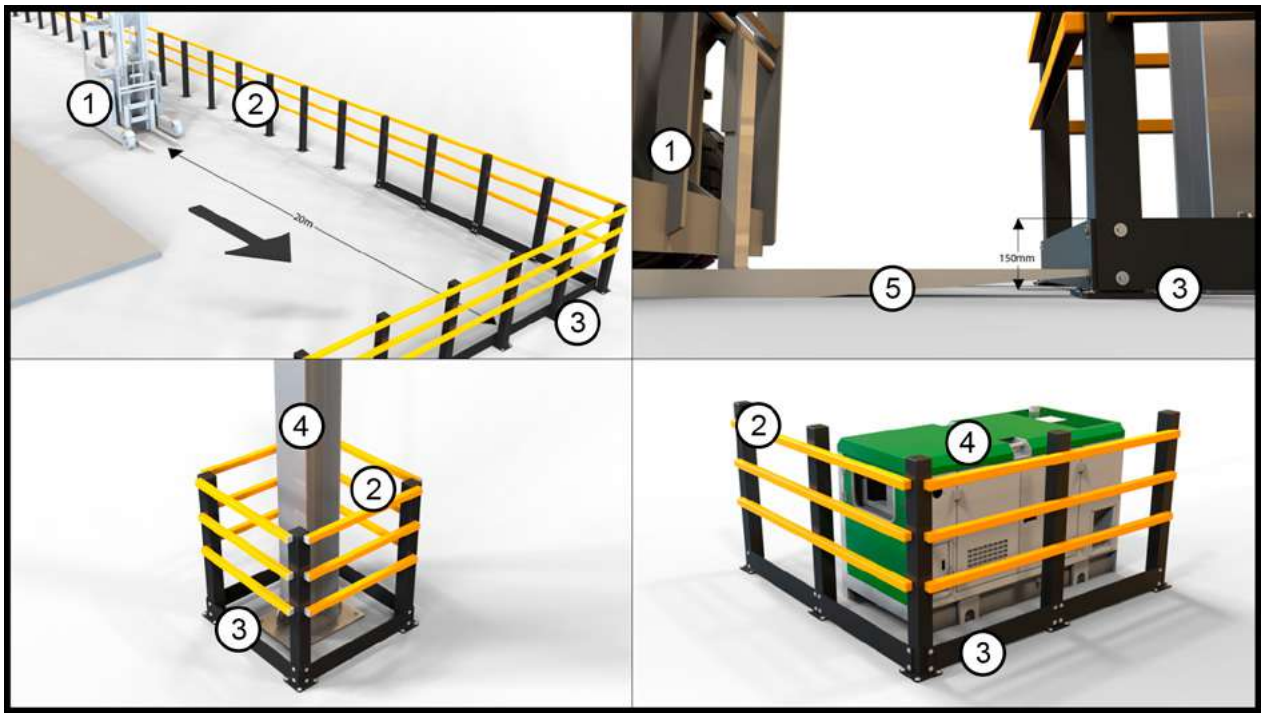

Key:
1. Vehicle
2. Safety barrier
3. Ground level protection
4. Examples of critical structures and equipment
5. Example of forks on a fork lift truck

***NOTE** The fork height is shown in relation to the ground level protection.*

5.7 Ground level protection should be tested using a dynamic test method using a fork striker described in **Clause 7**.

5.8 A safety barrier should be maintained in a permanent highly-visible colour, as follows:

a) yellow or yellow and black to signify caution and pedestrian guidance;

b) red and white to signify a warning or danger; or

c) green to signify exit points and safe conditions.

***NOTE** Figure 8 shows examples of recommended safety barrier colours.*

© The British Standards Institution 2017

Figure 8 – Safety barrier colours

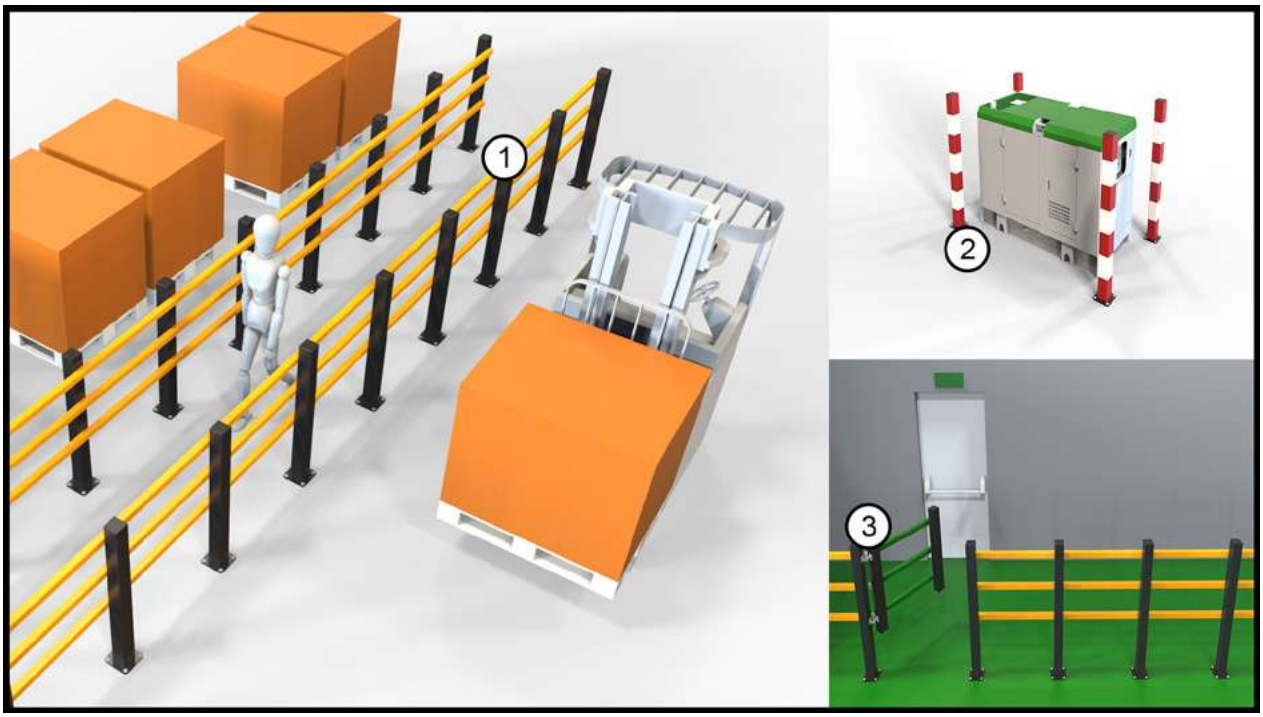

Key:
1. Yellow and black pedestrian segregation
2. Warning red and white bollards
3. Green safety pedestrian zone, green exit gate and green fire exit sign

5.9 The minimum safety zone space for pedestrians should be 600 mm as shown in Figure 9. When the pedestrian zone or pedestrian walkway leads to an emergency exit or fire exit, the total space should be a minimum of 750 mm to 1 050 mm depending on the maximum number of people using the exit [4].

NOTE 1 *The space for emergency exit access may include the deflection space of the safety barrier described in* ***5.10****. The width of escape routes is shown in Annex A, Table A.1. For example, 600 mm and 150 mm deflection means an escape route of 750 mm; if the deflection of the safety barrier is greater than 150 mm then the aisle width needs to be wider to suit.*

NOTE 2 *Disabled access may be considered when necessary. A guide of 1 200 mm may be used for the space required.*

5.10 The deflection of a safety barrier under maximum impact, carried out according to the test method described in **Clause 7**, should be added to the safety zone when defining the safe pedestrian area behind a safety barrier. The deflection zone should be marked out with a white line, as shown in Figure 9.

NOTE *The space is defined by maximum deflection plus 600 mm.*

© The British Standards Institution 2017

Figure 9 – A pedestrian safe zone and deflection zone

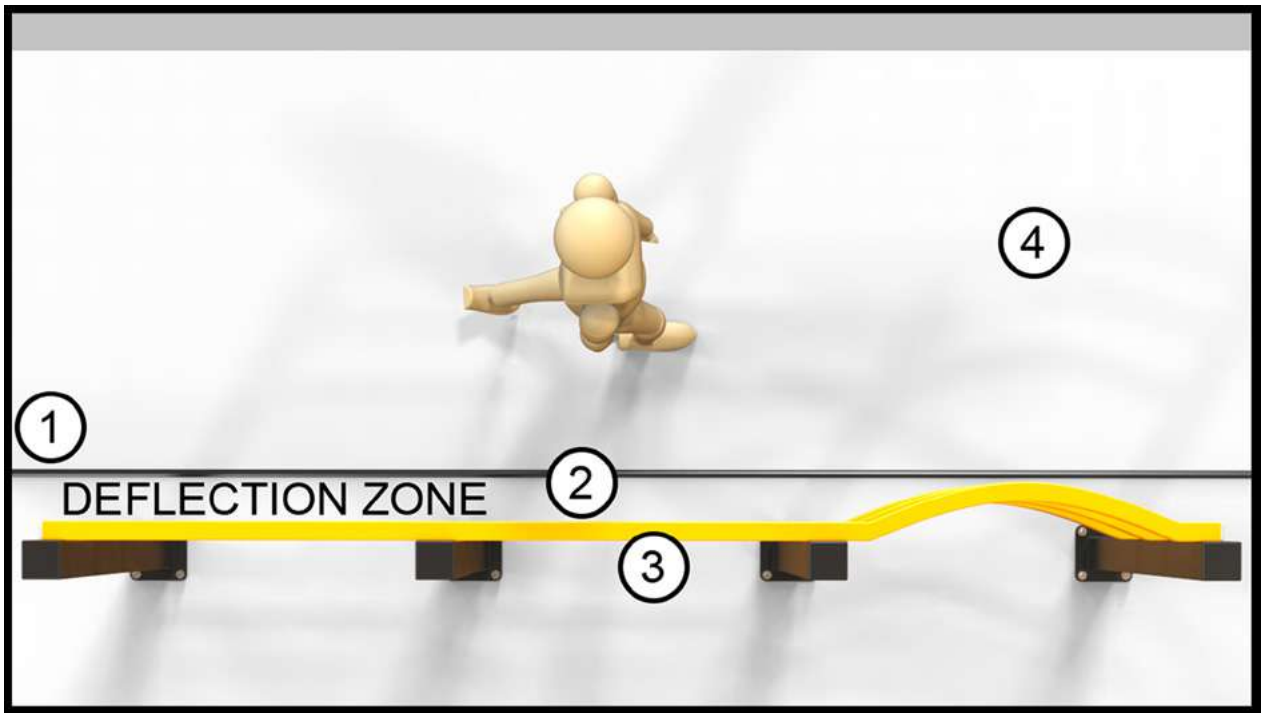

Key:
1. White line to indicate end of deflection zone
2. Deflection zone
3. Safety barrier
4. Pedestrian safe zone showing a minimum width of 600 mm

5.11 A safety barrier should not deform beyond the marked-out deflection zone, as shown in Figure 10.

Figure 10 – Correct and incorrect safety barriers deformation and deflection zones

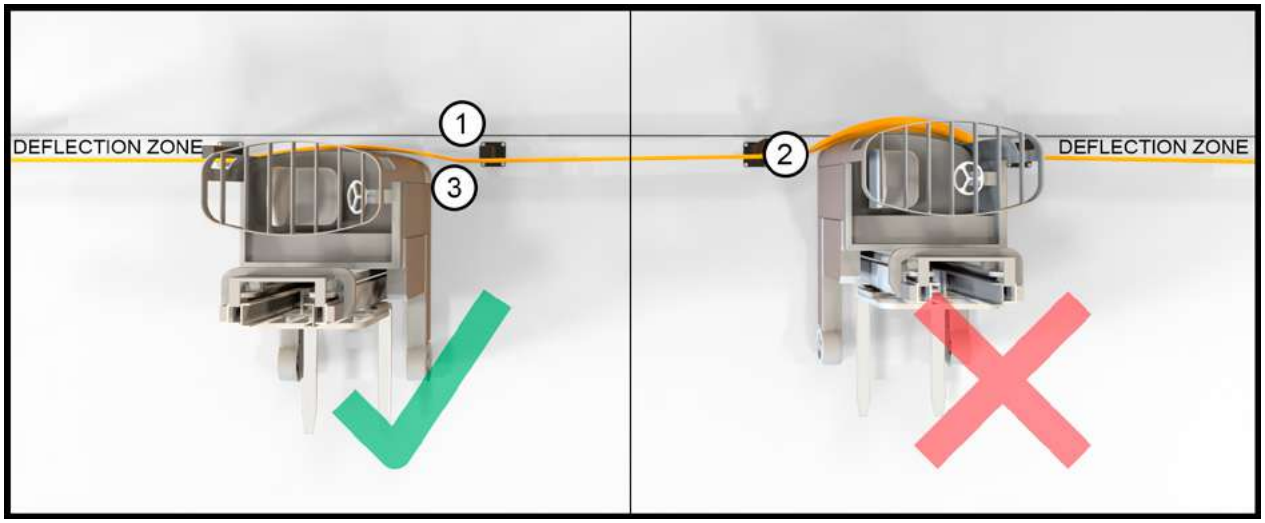

Key:
1. A line to indicate end of deflection zone
2. Deflection zone
3. Safety barrier

© The British Standards Institution 2017

5.12 In food processing and medical environments safety barriers should conform to the machine and equipment design described in BS EN 1672-2.

NOTE *Attention is also drawn to the HSE guidance on hygienic design [5].*

5.13 The position of a safety barrier that is protecting a structures should be:

a) independent of the structure it is protecting; and

b) at a distance from the structure greater than its maximum deflection as shown in Figure 11.

Figure 11 – Correct and incorrect examples of safety barriers next to structures including the deflection zone

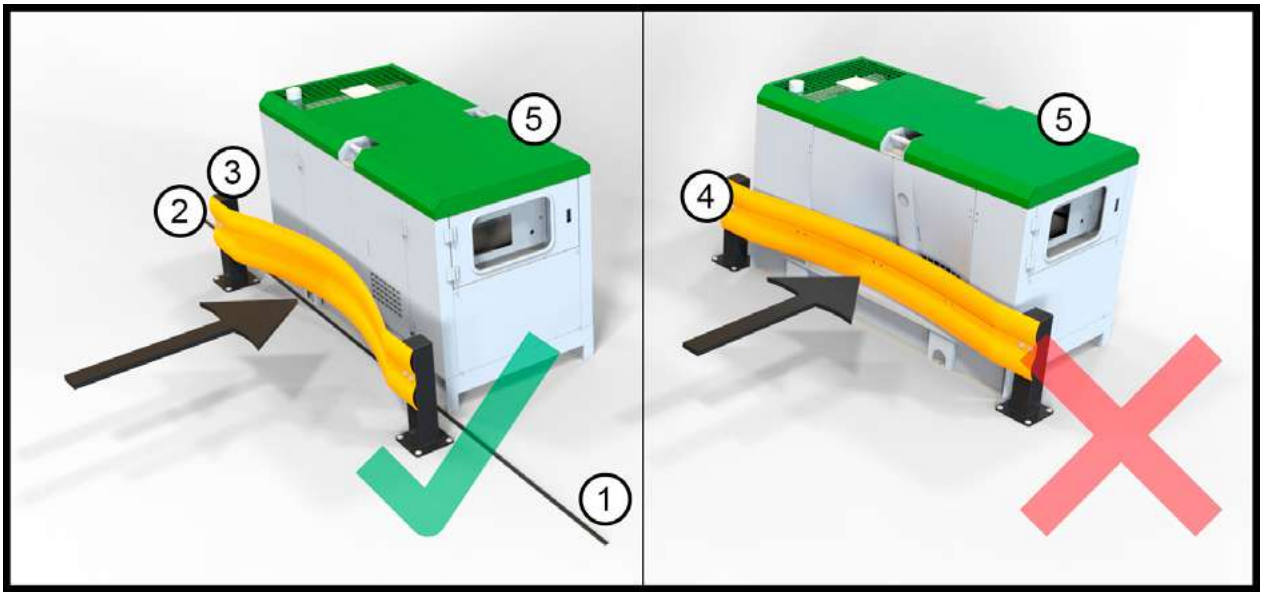

Key:
1. A line to indicate end of deflection zone
2. Deflection zone
3. Example of a safety barrier deflecting within its deflection zone during impact
4. Example of a safety barrier deflecting beyond its deflection zone and making contact with equipment
5. Example of undamaged critical equipment

5.14 A risk assessment should be carried out to determine if people are likely to work in the area. If the risk assessment determines that people are likely to work in the area:

a) the safety barrier should have a handrail or balustrade when pedestrians are present and need to hold onto it; and

b) the handrails or balustrading should be 1 100 mm in height as, shown in Figure 12.

NOTE 1 *This height is recommended for the following reasons:*

a) the barrier will not be easily climbable; and

b) it stops a person leaning over the barrier and it being a fulcrum to waist height.

NOTE 2 *The barrier should withstand two adults leaning on it.*

© The British Standards Institution 2017

Figure 12 – Hand rail height for pedestrians

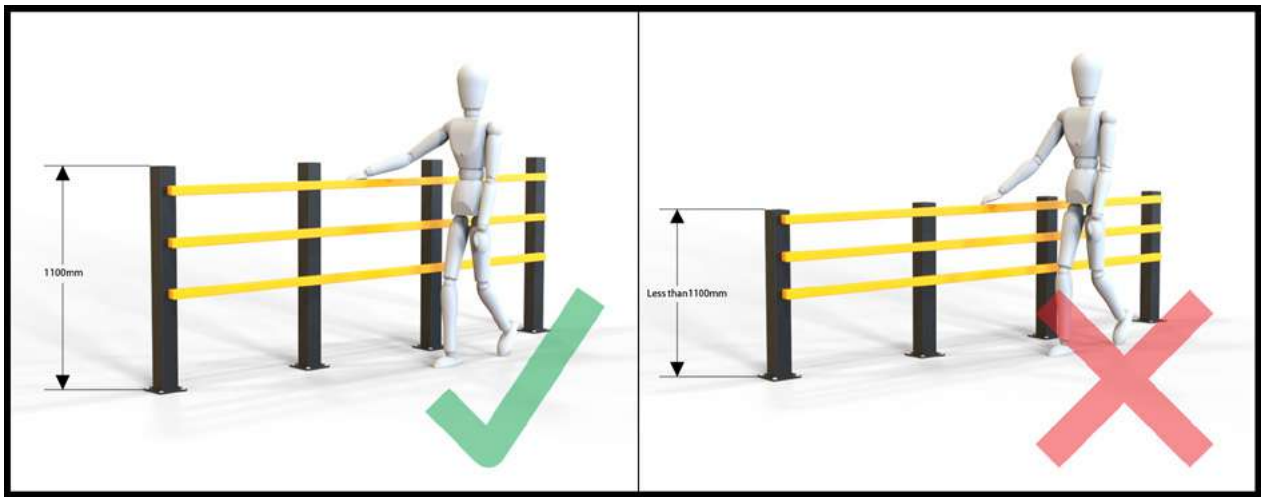

5.15 Safety barriers that protect pedestrians should not have sharp edges and should have smooth, ergonomically-designed surfaces as shown in Figure 13.

NOTE *This ensures pedestrians do not scratch, cut, catch or hurt themselves when walking near, or coming into contact with, the safety barriers.*

Figure 13 – Safety barriers with smooth and sharp edges

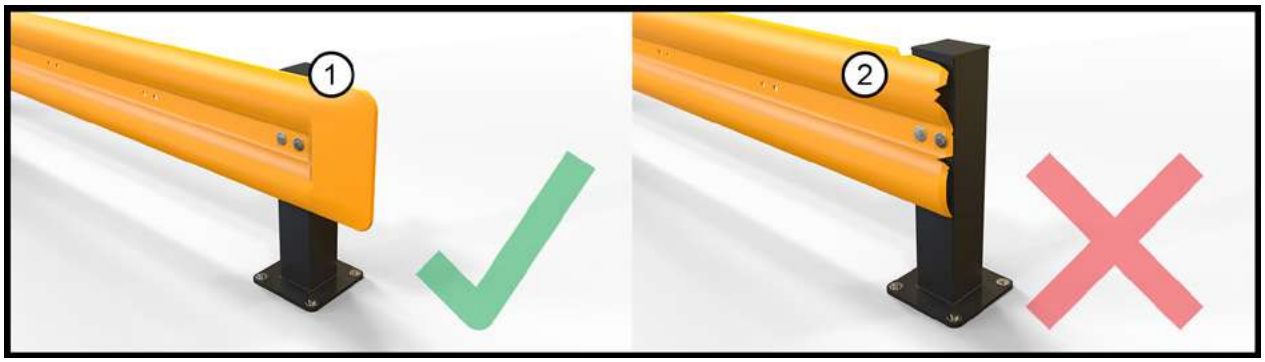

Key:
1. Safety barrier with a smooth surface and edges
2. Safety barrier with sharp rough edges

5.16 Safety barriers should be positioned and sized so they are easily seen by pedestrians and drivers of vehicles.

NOTE 1 *For example a safety barrier may be at a height and size that the driver sees it at any distance, as shown in Figure 14.*

© The British Standards Institution 2017

Figure 14 – Correct and incorrect sized and positioned safety barriers

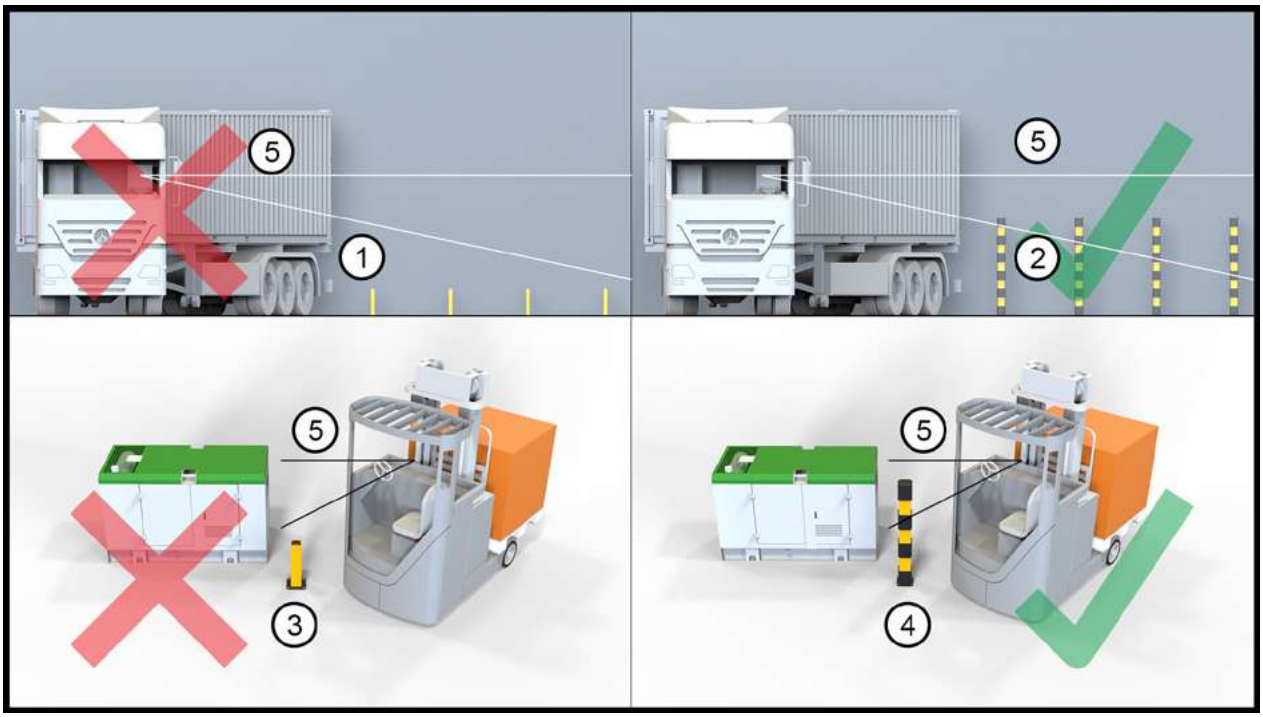

Key:
1. Bollard not in the driver's line of vision
2. Bollard in the driver's line of vision
3. Bollard not in the driver's line of vision
4. Bollard in the driver's line of vision
5. Line of vision for the driver of the vehicle

NOTE 2 *The line of vision may be the driver's mirrors whilst manoeuvring or the vision in front and around them.*

5.17 Surface-mounted safety barriers that use anchors should have a certified pull-out force greater than the maximum force that passes through the anchor on impact as demonstrated in Figure 15.

NOTE *The fixture system or anchor can fail by pulling out of the substrate or even pulling the substrate out, if the force passing through it from on impact is greater than the anchor's pull-out force capability.*

Figure 15 – Force on barrier in relation to the pull out force of a fixture system

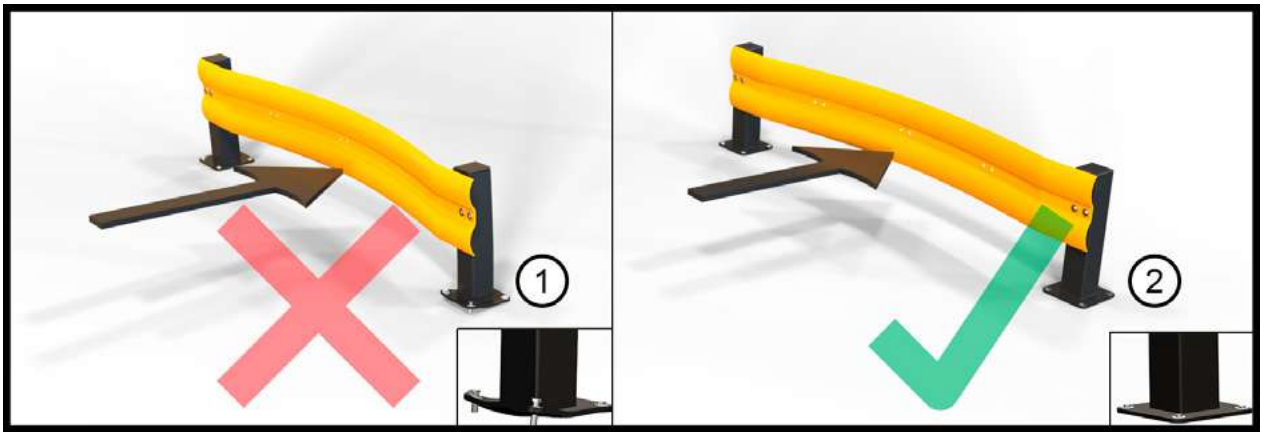

Key:
1. Failing anchor
2. Suitable anchor

© The British Standards Institution 2017

5.18 The pull-out force of the fixture system on the substrate should be tested. The testing should conform to BS 5080.

NOTE 1 *The test is to ensure the substrate is strong enough to withstand impact loads that may transmit through the fixture system from the safety barrier during impact.*

NOTE 2 *The manufacturer of the fixture system can state a maximum pull-out force for particular grades of concrete. The test can ascertain whether the fixture system meets this pull-out force, i.e. whether the quality of the concrete or substrate is adequate.*

NOTE 3 *See the Construction Fixings Association website at www.fixingscfa.co.uk for more information [6].*

5.19 In the event that a safety barrier is damaged or it is known to have been impacted, it should be examined by a competent person to determine the condition of it and the fixture system. Damaged safety barriers or fixture systems should be completely replaced with new barriers and fixture systems.

NOTE *Replacements may be a component instead of the whole system, for example replacement of a post, rail or fitting. It is advised that the need for replacement components is assessed by a competent person.*

© The British Standards Institution 2017

6 Kinetic energy of vehicles

6.1 How to calculate the kinetic energy of vehicles in a workplace

In order to establish which safety barrier to use within a workplace environment, the kinetic energy of the vehicles operating should be calculated using the equation:

$KE = ½ m \times (v\sin\Theta)^2$

where:

- KE is the kinetic energy (in joules);
- m is the mass of the vehicle (in kg);
- v is the velocity of the vehicle (in m/s);
- Θ is the impact angle.

NOTE *To simplify this calculation, the following figures for common angles may be used for the sinΘ calculation:*

- *Sin90 ° = 1*
- *Sin67.5 ° = 0.924*
- *Sin45 ° = 0.707*
- *Sin22.5 ° = 0.383*
- *Sin10 ° = 0.1736*

6.2 How to calculate the maximum vehicle impact angle in its direction of travel

NOTE 1 *The impact angles when a vehicle strikes a barrier affects the kinetic energy (KE) transferred, as shown in Figure 16. For example, if a vehicle impacts a barrier at an angle less than 90 °, the kinetic energy transferred to the barrier is less than when the vehicle impacts at 90 °.*

NOTE 2 *Some workplace environments have vehicles moving parallel to safety barriers. This means the vehicles are very unlikely to impact the barriers head-on.*

© The British Standards Institution 2017

Figure 16 – Vehicle lined up at different angles to a safety barrier

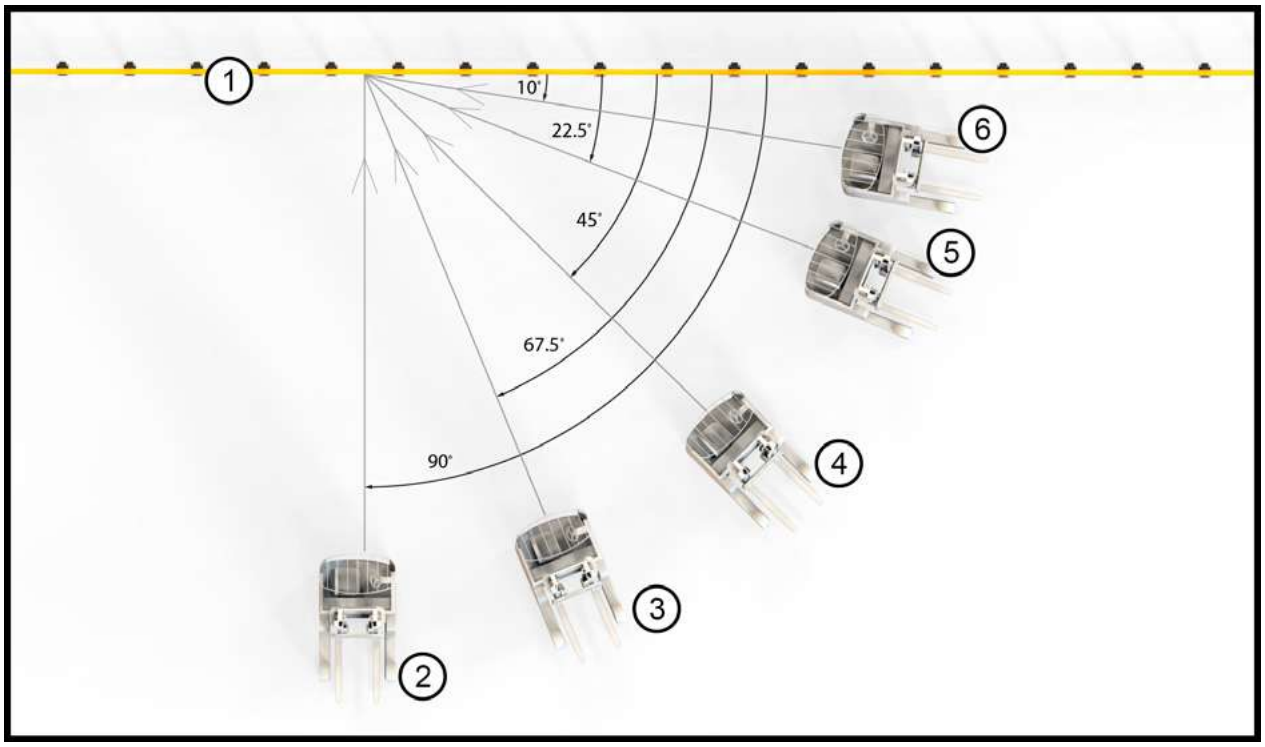

Key:
1. Safety barrier
2. Fork truck positioned with the direction of travel 90 ° to the safety barrier
3. Fork truck positioned with the direction of travel 67.5 ° to the safety barrier
4. Fork truck positioned with the direction of travel 45 ° to the safety barrier
5. Fork truck positioned with the direction of travel 22.5 ° to the safety barrier
6. Fork truck positioned with the direction of travel 10 ° to the safety barrier

To calculate the specific maximum angle Θ a vehicle will impact a barrier, both the dimensions of the vehicle and the space that the vehicle has to turn into a barrier should be measured. From this it is possible to determine the maximum angle that a vehicle will impact a barrier in its direction of travel, as shown in Figure 17, using the appropriate equation below:

a) Where the vehicle is steered via a single wheel (having a zero turning circle):

Determine the hypotenuse –

$$g = \sqrt{a^2 + e^2}$$

Determine Θ (angle of impact)

$$\Theta = \sin^{-1} \frac{e \times \sin G}{g}$$

b) Where the vehicle is steered via two rear wheels:

Determine the hypotenuse

$$g = \sqrt{a^2 + f^2}$$

© The British Standards Institution 2017

Determine Θ (angle of impact):

$$\Theta = \sin^{-1} \frac{f \times \sin G}{g}$$

where:

- a is the length from fork tip to pivot point;
- e is the vehicle width;
- f is the distance between the vehicle and the edge of the roadway;
- g is the hypotenuse calculated;
- G is a 90 ° angle between the barrier and the vehicle pivot point;
- Θ is the maximum angle of impact.

Figure 17 – A vehicle in an aisle and the calculation of its maximum impact angle

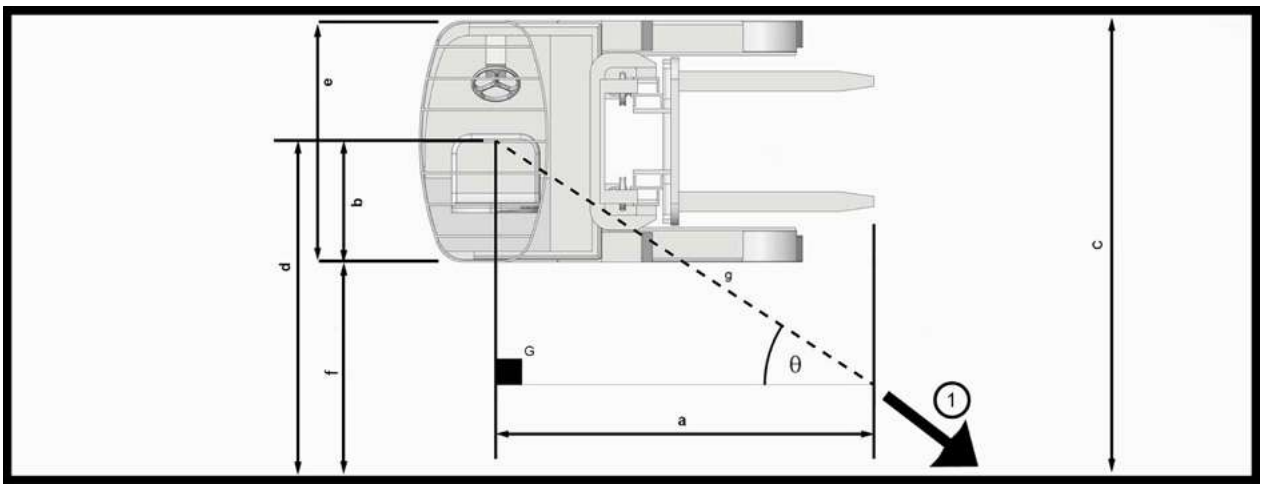

Key:

1. Direction of travel
a. Fork tip to steering pivot point
b. ½ vehicle width
c. Roadway width
d. Distance between centre of vehicle to edge of roadway or barrier
e. Vehicle width
f. Distance between vehicle to edge of roadway
g. Hypotenuse length
Θ = angle of impact
G = angle between vehicle parallel to barrier

6.3 Example calculations

6.3.1 Maximum impact angle

To calculate the maximum impact angle of a vehicle of width 1 m, in a roadway of 1.5 m, with a fork tip to steering pivot point of 1.5 m (as shown in Figure 17):

- a = 1.5 m
- d= 1 m
- f = 0.5 m
- G = 90 °

© The British Standards Institution 2017

a) Where the vehicle is steered via a single wheel (having a zero turning circle):

Hypotenuse:

$$g = \sqrt{1.5^2 + 1^2} = 1.803$$

Angle of impact:

$$\Theta = \sin^{-1}\left(\frac{1 \times \sin 90}{1.803}\right) = 33.7\,° \; \Theta = \sin^{-1}\left(\frac{1 \times \sin 90}{1.803}\right) = 33 \cdot 69E = \sin^{-1}\frac{1 \times \sin 90}{1.803}$$

The maximum impact angle is 33.7 °.

b) Where the vehicle is steered via two rear wheels:

Hypotenuse:

$$g = \sqrt{1.5^2 + 0.5^2} = 1.581$$

Angle of impact:

$$\Theta = \sin^{-1}\left(\frac{0.5 \times \sin 90}{1.581}\right) = 18.4\,°$$

The maximum impact angle is 18.4 °.

6.3.2 Kinetic energy

To calculate the kinetic energy of a 5-tonne vehicle carrying 1 tonne of weight, traveling at 5 km/h at a 45 ° impact angle to the safety barrier (as shown in Figure 18):

- m = 6 000 kg
- v = 1·3888 m/s
- Θ = sin45 = 0·707

KE = (½) (6 000 × (1.3 888 × 0.707)^2)

KE = 2 893 joules

The vehicle produces 2 893 joules of energy.

© The British Standards Institution 2017

Figure 18 – Vehicle impacting a safety barrier at 45 °

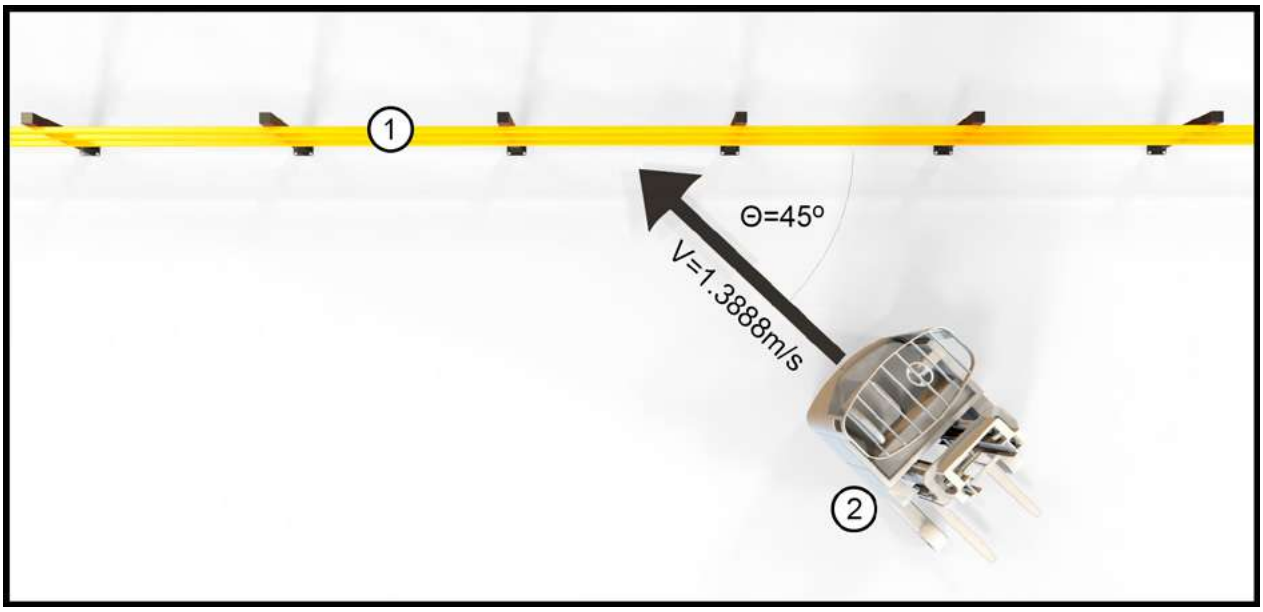

Key:
1. Safety barrier
2. Fork truck positioned with the direction of travel 45 ° to the safety barrier

V Velocity

NOTE *Annex B is a guide for typical vehicles in the workplace. Figure B.1 provides guidance on the maximum angle of impact for typical workplace vehicles, at a particular distance away from a safety barrier. Figure B.2 provides guidance to help the user understand the energy that is transferred to a safety barrier by typical workplace vehicles at different angles.*

© The British Standards Institution 2017

7 Methods of testing the force of impact that a safety barrier can withstand

7.1 Principle

A test barrier is exposed to a controlled dynamic impact from a striker. The test barrier is impacted in a dynamic motion to measure its resistance. The test also measures the deflection of the test barrier and the loads seen by the fixture systems and ground.

The process is:

a) Decide if you require to performance rate a safety barrier, ground level protection or both. The two tests are:
   1) performance rating a safety barrier; and
   2) performance rating ground level protection.

b) Select the appropriate striker for the chosen test or tests:
   1) a bumper striker is used to performance rate the safety barrier;
   2) a two-fork striker is used to performance rate ground level protection;

c) Select just one of three test apparatus listed below, to impact the appropriate striker onto the test barrier.
   1) a pendulum;
   2) a vehicle; or
   3) a sled and ramp.

d) Repeat the test at least once with a new test barrier to ensure the safety barrier performance rating and the results are consistent.

NOTE 1 *One test or both tests are executed depending if safety barrier is being used as a general safety barrier or/ and used for ground level protection.*

NOTE 2 *See **5.5** for when ground level protection is required.*

7.2 General apparatus

NOTE *The following apparatus is used in each of the pendulum, vehicle or sled and ramp tests.*

7.2.1 *Test barriers and fixture system*, for analysis and measurement.

NOTE 1 *A minimum of two barriers are used for each test performed.*

NOTE 2 *The fixture system is used to anchor the test barrier to the ground conforming to the manufacturer's instructions.*

7.2.2 *Line marking material*, to mark out the test area and deflection area.

7.2.3 *Load cell*, with a display capable of taking a minimum of 100 samples per second.

7.2.4 *High-speed camera*, with a minimum frame rate of 200 frames per second.

7.2.5 *Standard camera*, for visual inspection evidence.

7.2.6 *Weights*, added or removed from test apparatus depending on the mass required for the test as described in the test procedure.

NOTE *As an example, the mass of the individual weights could be 25 kg each and the weights could take the form of steel plates or steel blocks.*

© The British Standards Institution 2017

7.2.7 *Weighing scales*, to measure the weight of components.

7.2.8 *Certified surveying equipment*, to measure post-spacing, rail heights, alignment orientation and any critical items.

7.2.9 *Safety net*, with a 50 mm mesh made from a high-strength nylon to stop any debris flying out during the test.

7.2.10 *Bumper striker*, a segment of circle of radius 725 mm with a chord of 1 000 mm and a height of 200 mm used with the test to rate the performance of a safety barrier, integrated with the test equipment used on the test and constructed of materials that will not deform or absorb energy during an impact and withstands repeated impact events.

NOTE *The bumper striker can be used with the pendulum, vehicle or sled and ramp test equipment. An example of a bumper striker is shown in Figure 19.*

Figure 19 – Example of a bumper striker

7.2.11 *Two-fork striker*, forks constructed of materials that do not deform or absorb energy during an impact and withstands repeated impact events; fork tips are vertical flat face, 50 mm wide and 10 mm thickness with a surface area of 500 mm^2; the distance between the centre of one fork to the second is 700 mm.

NOTE *The two-fork striker is used to performance rate ground level protection. It can be used with pendulum, vehicle or sled and ramp test equipment. An example of a two-fork striker is shown in Figure 20.*

© The British Standards Institution 2017

Figure 20 – Example of a two-fork striker dimensions

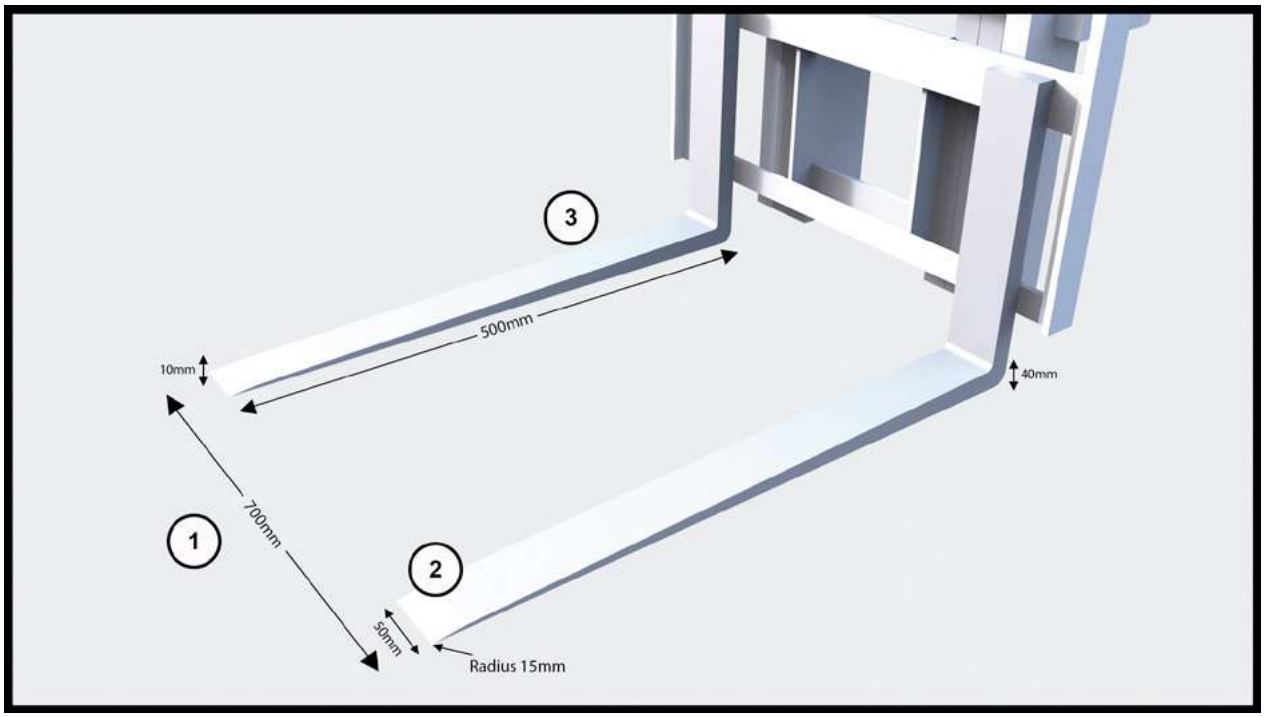

Key:
1. Distance between the forks
2. Fork width
3. Fork length

7.3 General preparation

7.3.1 A safety zone is set out for any observers and the safety net is put around the front and sides of the test barrier to capture any flying debris.

7.3.2 A minimum of two test barriers are used for each test performed.

7.3.3 Each test barrier is positioned in the test area and acclimatized to the temperature and humidity level required for the testing, for at least four hours.

7.3.4 Specifications of each test barrier, including the engineering drawings, are documented.

NOTE *See example shown in Figure 21.*

© The British Standards Institution 2017

Figure 21 – Example of a safety barrier drawing and specification sheet

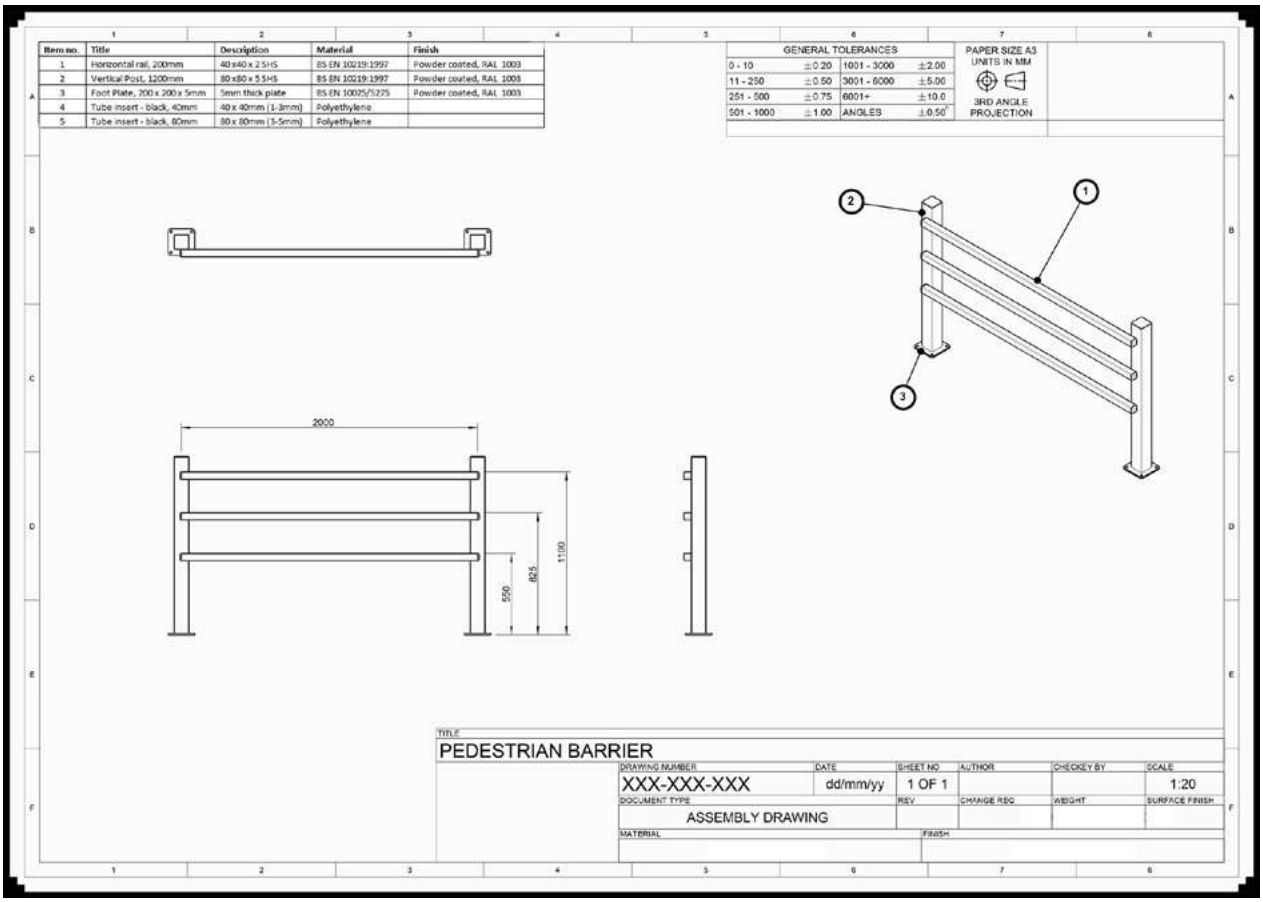

Key:
1. Horizontal rail
2. Vertical post
3. Floor plate

7.3.5 Each engineering drawing identifies the test barrier in exact detail, showing arrangement, locations and dimensions of all components.

7.3.6 Specifications for materials used are included in all documents.

7.3.7 Any structures used to support the barrier structure and resist induced forces during the test impacts are specified and documented.

7.3.8 The test barrier is attached to solid ground or a frame using a fixture system that is installed to the manufacturer's instructions.

7.3.9 Lines on the floor are marked at 50 mm intervals behind the test barrier to enable measurement of deflection. The measurement is then taken using the high-speed camera software and film recording.

7.3.10 The high-speed camera is positioned in line with the test barrier in order to record the impact. The marked lines are in view of the high speed camera.

7.3.11 A load cell is positioned on the fixture system of the test barrier to measure the transmitting force.

7.3.12 The test barrier is aligned so that the striker impacts it at its central point and 90 ° to the striker.

© The British Standards Institution 2017

7.3.13 The test area and test barrier are photographed before and after each test is performed.

NOTE An example of the test barrier is shown in Figure 22. This figure shows a pendulum being used to test the barrier but the test barrier set-up is the same if a vehicle or sled and ramp are used.

Figure 22 – Example of a test barrier (using pendulum equipment) with lines marked on the ground to measure deflection

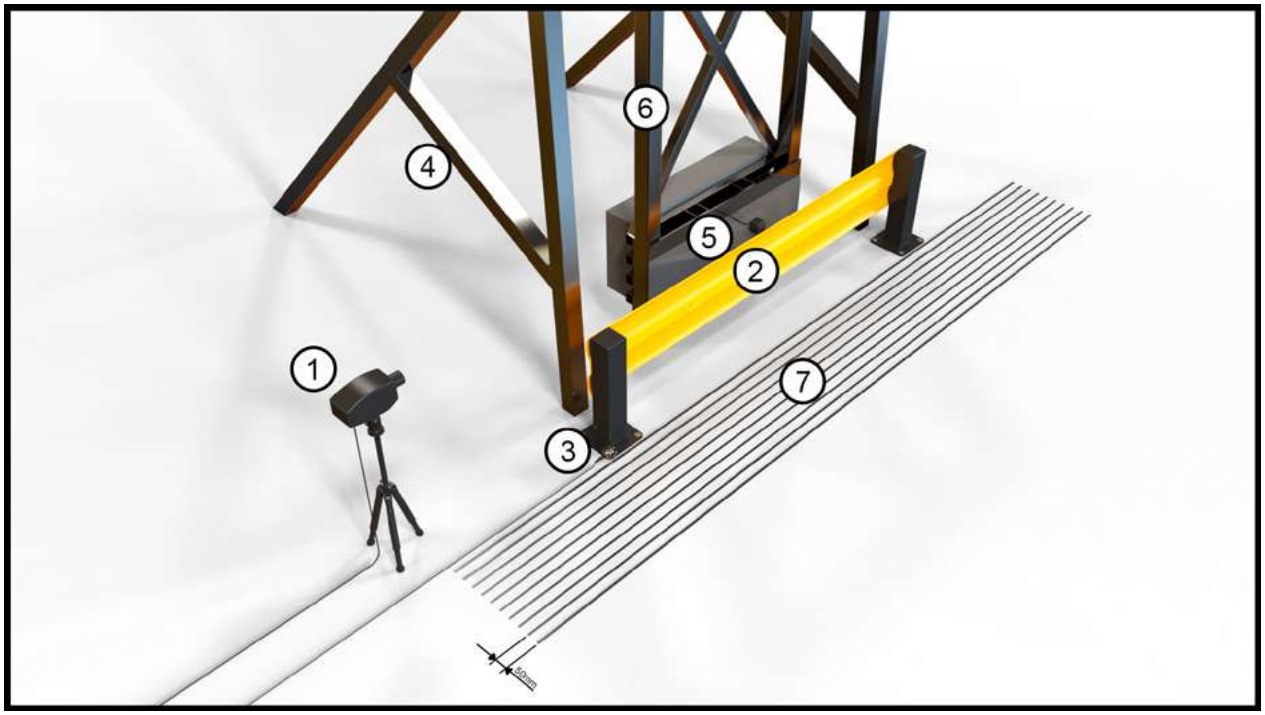

Key:
1. High speed camera
2. Test barrier
3. Load cell located on the fixture system
4. Pendulum frame
5. Bumper striker
6. Pendulum arm
7. Marked lines on the floor

7.4 General procedure

7.4.1 The bumper striker is used for the safety barrier performance test and the two-fork striker is used for the ground level protection performance test.

7.4.2 The test barrier is subjected to a defined amount of kinetic energy. If the test is performed on a test barrier that has rails, the test is performed on the following component targets of the barrier:

1) the mid-post, if present and structurally different from the end post, at a height level with the centre of the rail;
2) the end post at a height level with the centre of the rail; and
3) on the rail at the point central between two posts and central in height of the rail.

© The British Standards Institution 2017

If the test barrier has no rails, the test is performed on the central part of the test barrier at a height of between 200-500 mm.

NOTE 1 *Figure 23 shows an example of these test targets.*

NOTE 2 *It is important that the testing impact height and safety barrier design match the impact heights of the vehicles with which they are intended to be used (see **5.4**).*

NOTE 3 *The test is the same for both a general safety barrier performance rating and ground level protection performance rating.*

Figure 23 – Examples of where to impact safety barrier components

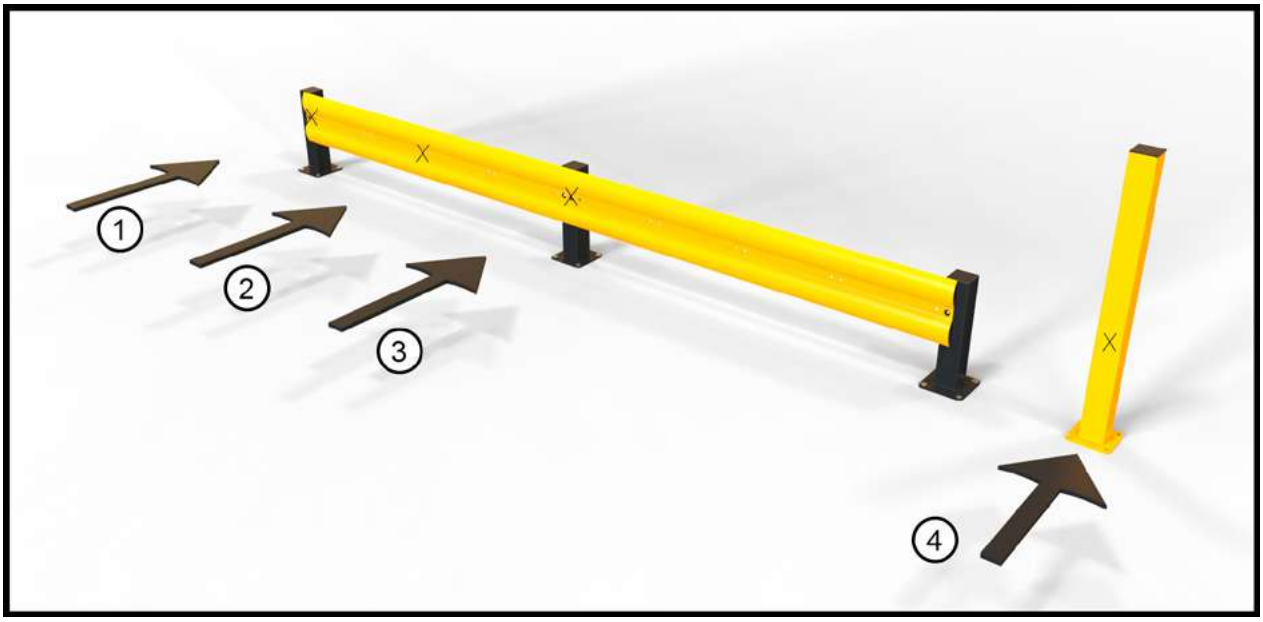

Key:
1. End-post test
2. Centre of rail test
3. Mid-post test
4. Central part of stand-alone test barrier

7.4.3 The tests on the components are performed at least two times with new test barriers for each test, to evaluate the sample consistency.

7.4.4 Record the environmental temperature and test the barrier at the highest and lowest temperatures in which it will be used.

7.4.5 Quarantine the test area to keep pedestrians a safe distance from the impact zone.

7.4.6 Use a safety factor of 5% in the tests. The test barrier is rated at 5% less than the kinetic energy impacted on it.

7.4.7 Turn on the high-speed camera before the striker is released to capture and record the impact for analysis.

7.4.8 Record the results of the impact test in the test report.

NOTE 1 *The impact ultimately determines if the test barrier, test barrier components and the fixture systems used can withstand the transferred kinetic energy.*

NOTE 2 *Annex C shows an example of a test report that may be used.*

© The British Standards Institution 2017

7.5 Pendulum test

7.5.1 Pendulum apparatus to impact the strikers onto the barrier

Pendulum, constructed of rigid material that allows maximum kinetic energy transfer to the test barrier; pendulum arm is free to swing with minimum resistance to movement; the mechanism for releasing the pendulum from its initial position on the frame operates freely and permits release of the pendulum without initial impulse, retardation or side vibration.

***NOTE** An example of the pendulum is shown in Figure 24.*

Figure 24 – Example of a pendulum using a bumper striker

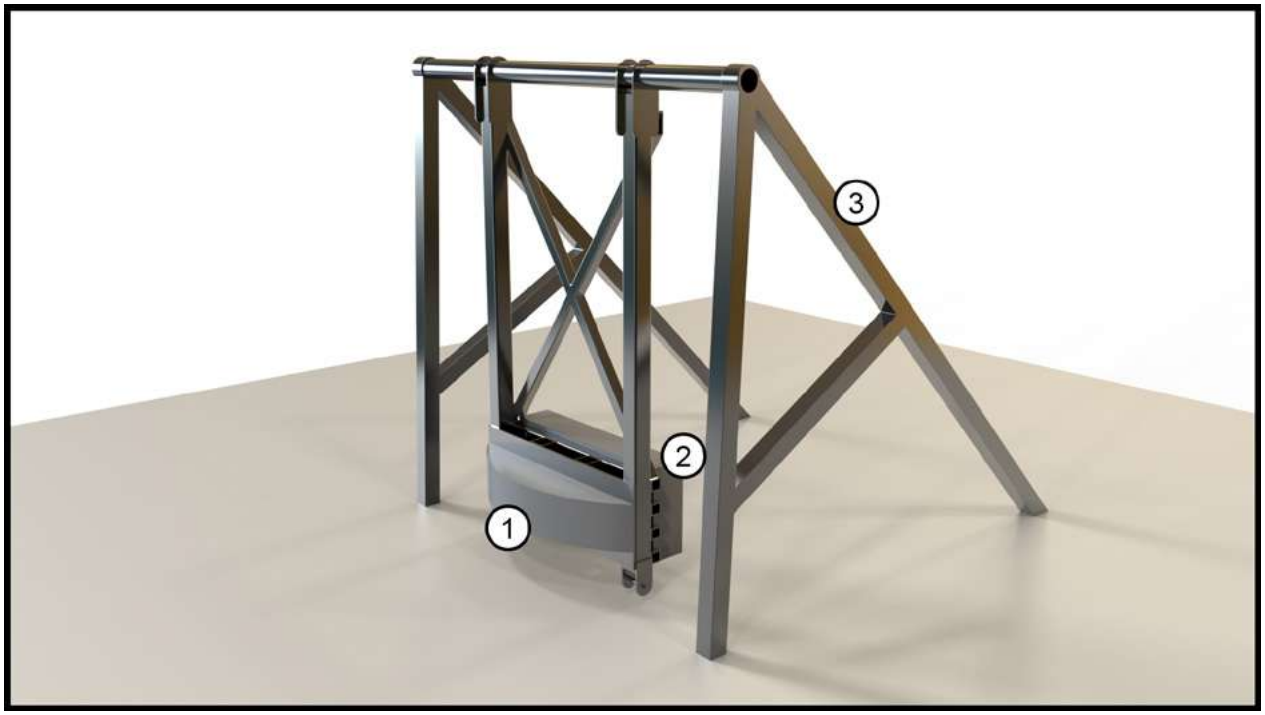

Key:
1. Bumper striker
2. Weights
3. Pendulum frame

7.5.2 Pendulum impact test preparation

7.5.2.1 Select the bumper striker or two-fork striker depending on the test type chosen.

7.5.2.2 Secure or bolt the striker and make it integral to the pendulum arm.

7.5.2.3 The test barrier is positioned so the pendulum arm will strike it horizontal at the point of impact (i.e. at 90 ° to the barrier), thereby transferring the maximum kinetic energy at the point of impact.

7.5.2.4 Weights can be added or removed from the pendulum and these are weighed on a commercial certified scale in order to determine the mass.

7.5.2.5 The weights are bolted and made integral to the pendulum.

***NOTE 1** Figure 25 shows an example of a bumper striker horizontal (at 90 °) at impact against the test barrier.*

***NOTE 2** The barrier position might have to change in order to keep the striker impact position horizontal according to the type of striker; for example if the fork striker is longer than the bumper striker and this means the barrier position moving further away.*

© The British Standards Institution 2017

Figure 25 – Example of pendulum test with the striker at 90 ° against the test barrier

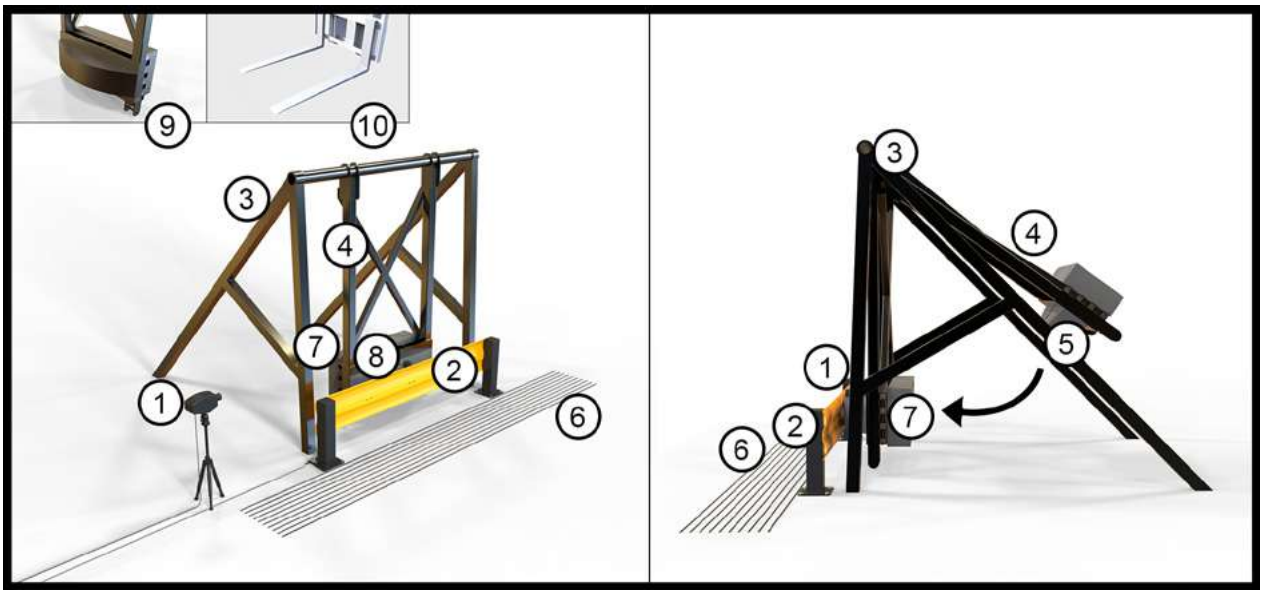

Key:
1. High speed camera
2. Test barrier
3. Pendulum frame
4. Pendulum arm
5. Striker
6. Marked lines to measure deflection during impact
7. Weights
8. Striker impacting a test barrier
9. Example of a bumper striker
10. Example of a fork striker

7.5.2.6 Each time a different striker is used, the mass of the striker is independently weighed and recorded using scales.

7.5.2.7 The velocity of the pendulum arm is calculated and certified.

The velocity may be approximated from the gravity equation for a weight dropping from a height.

The height is determined by the angle from the vertical that is the starting point of the pendulum's swing. Thus, the velocity at the bottom of the swing can be determined using the following equation:

$$v = \sqrt{2 \times g \times L \times (1 - \cos(a))}$$

where:

- v is the velocity of the weight at the striker position (in m/s);
- g is the acceleration due to gravity (9.81 m/s^2);
- L is the length of the pendulum arm (in m);
- (a) is the angle from the vertical.

© The British Standards Institution 2017

EXAMPLE:

Example of a pendulum having a striker arm length of 1.5 m from the pivot point, positioned at a 90 ° angle:

$$\text{Velocity} = \sqrt{2 \times 9.81 \times 1.5 \times (1 - \cos 90)} = 5.42 \text{ m/s}$$

7.5.2.8 The efficiency of the pendulum arm is calculated and certified. The efficiency of the pendulum device may be determined by the measure of the striker heights, at the initial position prior to release and the maximum height position on its first oscillation. The first oscillation height is to be subtracted from the initial height. This is done with the freefall of the pendulum without any test specimens.

The percentage efficiency may be calculated as follows:

$$\text{Efficiency (\%)} = 100 - \left(\frac{1}{2}\left(\frac{\text{Inital Height} \times \text{Oscillation Height}}{\text{Inital Height}}\right) \times 100\right)$$

EXAMPLE:

Example for a pendulum having a striker position's at 2 m for initial height and 1.95 m for first oscillation height.

$$\text{Efficiency (\%)} = 100 - \left(\frac{1}{2}\left(\frac{2 - 1.95}{2}\right) \times 100\right) = 98.75\%$$

This equates to the efficiency due resistance of the pendulum arm and the value is used with any calculated velocity figure.

7.5.3 Pendulum test procedure

7.5.3.1 Determine the striker mass required to impact the test barrier in order to measure and classify its performance including the 5% safety factor using the following calculation:

$$m = \frac{(E \times 105\%)}{(g \times L \times (1 - \cos(a)) \times \text{efficiency (\%)})}$$

where:

- m is the striker mass;
- E is the energy required in the test (J);
- g is the acceleration due to gravity (9.81 m/s^2);
- L is the length of the pendulum arm;
- (a) is the angle from the vertical;
- cos(a) is the cosine of angle a.

EXAMPLE:

Example to determine the striker mass for the pendulum test with a required impact energy of 1 470 J:

$$m = \frac{(1\,470 \times 105\%)}{9.81 \times 1.5 \times (1 - \cos(90)) \times 98.75\%} = 106.22 \text{ kg}$$

7.5.3.2 Hoist the pendulum arm and striker up.

7.5.3.3 Release the striker to impact against the test barrier. The striker is released remotely for safety.

7.5.3.4 The striker impacts against the test barrier.

7.5.3.5 Record the results of the impact tests in the test report.

NOTE *An example of the pendulum test is shown in Figure 26.*

© The British Standards Institution 2017

Figure 26 – Example of pendulum impact test and cross section

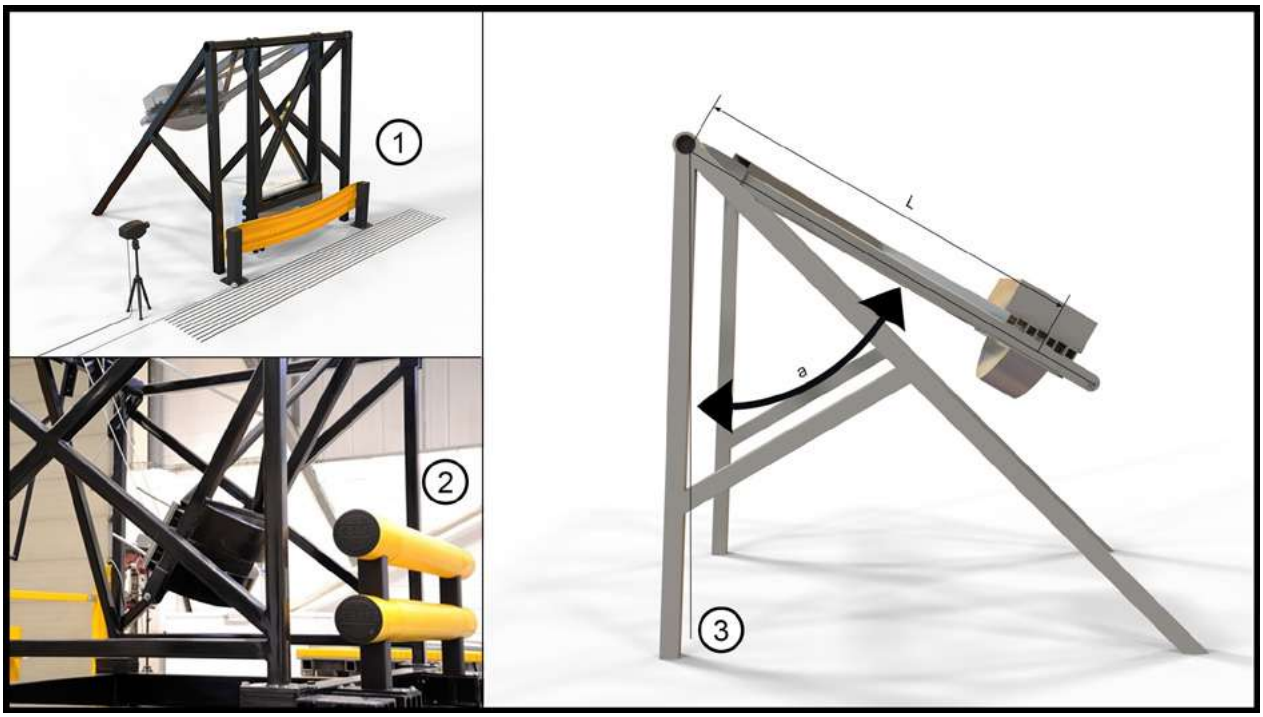

Key:
1. 3D image pendulum striker impacting a test barrier at 90 °
2. Photograph of a pendulum striker about to impact a test barrier
3. Cross section of a pendulum

L length of pendulum arm

a angle of pendulum arm from rest to its hoisted position

7.6 Vehicle test

7.6.1 Vehicle impact apparatus

7.6.1.1 *Vehicle*, a counter-balance or reach fork lift truck commonly used in industrial environments.

7.6.1.2 *Speed trap*, used to measure velocity, may be constructed of two mats or of two lasers.

NOTE *An example of a vehicle that can be used to perform the vehicle impact test is shown in Figure 27.*

© The British Standards Institution 2017

Figure 27 – Example of a vehicle used in a vehicle impact test

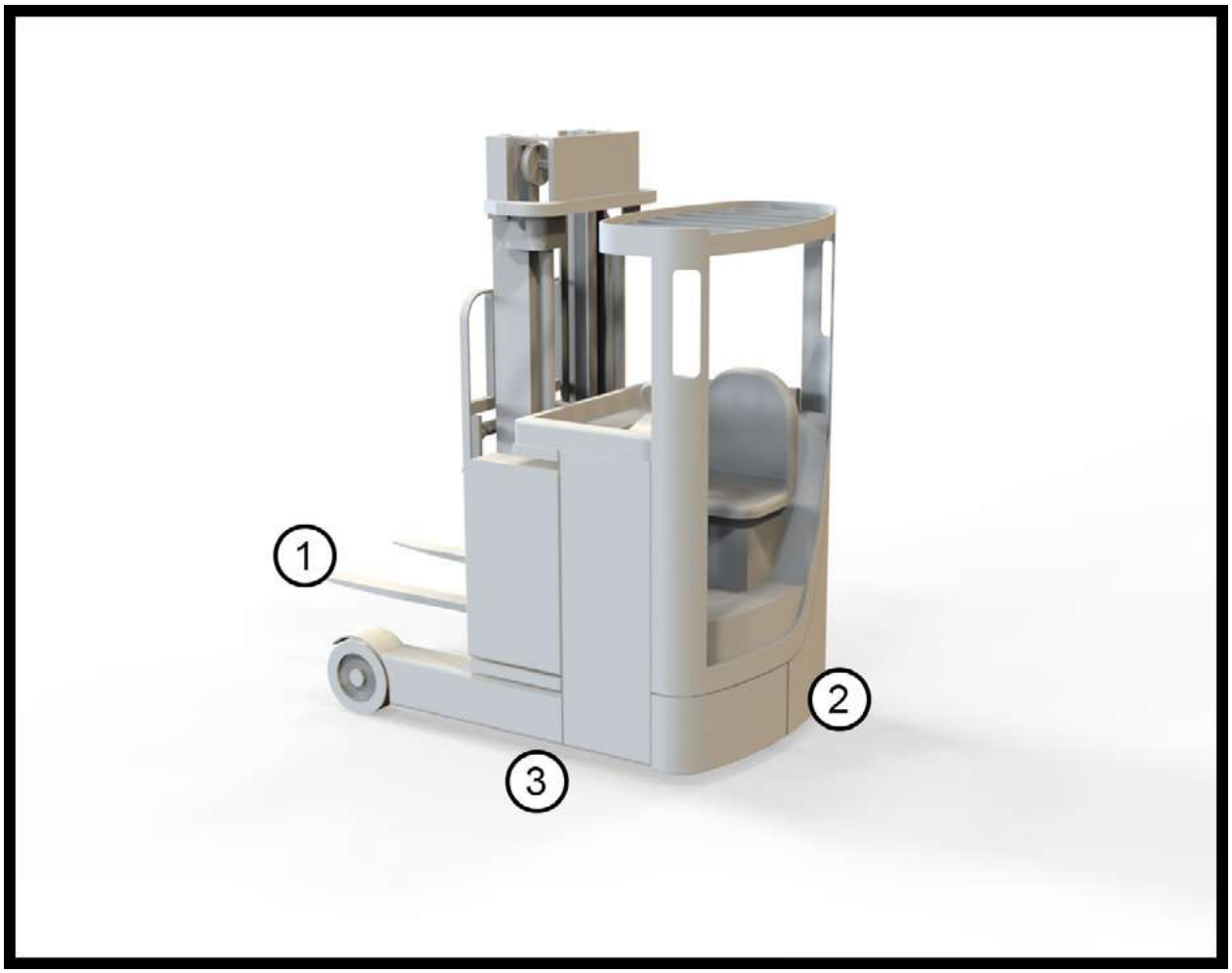

Key:
1. Forks striker
2. Bumper striker
3. Fork lift truck

7.6.2 Vehicle impact test preparation

7.6.2.1 The vehicle is weighed on a commercial certified scale in order to determine its mass.

7.6.2.2 The vehicle bumper or two-fork striker will face the test barrier depending on the test type chosen.

7.6.2.3 The strikers are integral to the vehicle.

7.6.2.4 The test barrier is positioned and lined-up so the vehicle is in a straight line and will impact at the desired location on the test barrier. The vehicle is accelerated in a straight line.

7.6.2.5 Weights can be added or removed from the vehicle and these are weighed on a commercial certified scale in order to determine the mass.

7.6.2.6 The weights are bolted and made integral to the vehicle.

7.6.2.7 The equipment to measure velocity is set up; for example, a speed trap consisting of two mats or lasers is set up to capture the speed before impact.

NOTE *Figure 28 shows an example of vehicle impact test preparation area.*

© The British Standards Institution 2017

Figure 28 – Example of a vehicle impact test preparation area

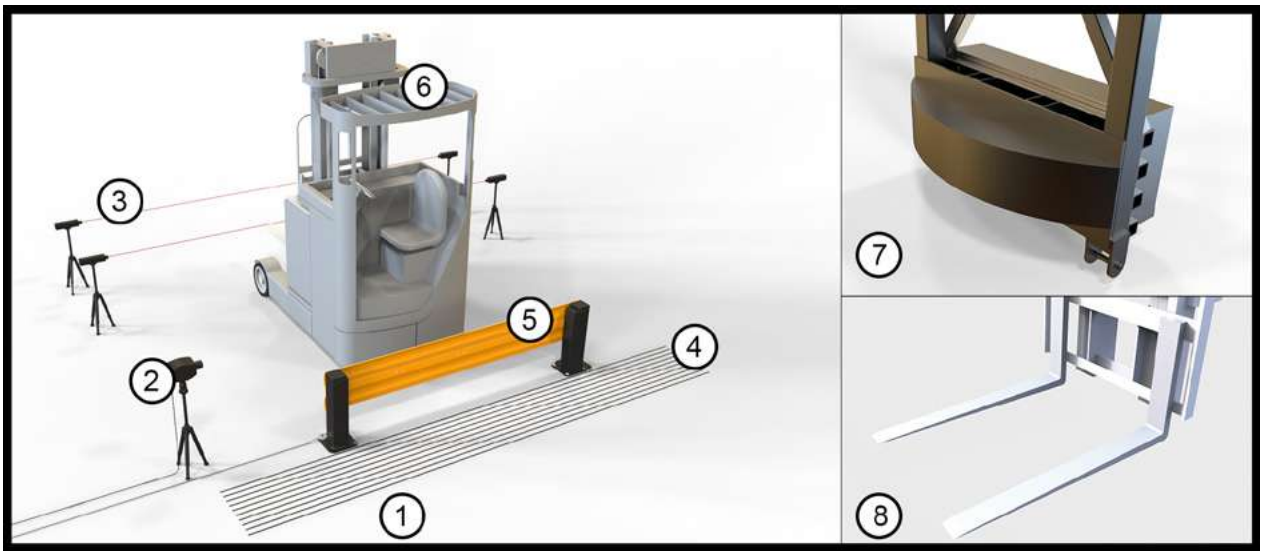

Key:
1. 3D image of a vehicle test procedure
2. High speed camera
3. Speed trap
4. Marked lines to measure deflection during impact
5. Test barrier
6. Vehicle
7. Example of a bumper striker
8. Example of a fork striker

7.6.3 Vehicle impact test procedure

7.6.3.1 The speed of the vehicle or sled during the test is 5 to 15 km/h.

NOTE *This speed is to provide a realistic performance rating of the safety barrier.*

7.6.3.2 Determine the vehicle mass and/or the vehicle impact speed required so as to measure and classify the performance of the barrier including the 5% safety factor using the equations in **7.6.3.2** and **7.6.3.3**.

7.6.3.3 To determine the mass of the vehicle or sled required:

$$m = \frac{2 \times E \times 105\%}{v^2}$$

where:

- m is the mass of the vehicle (kg);
- E is the impact energy required in the test (J);
- v is the velocity of the vehicle at impact (m/s).

EXAMPLE:

Example for a vehicle or sled requiring a 15 000 J impact energy impacting at 4.47 m/s:

$$m = \frac{2 \times 15\,000 \times 105\%}{4.47^2} = 1\,576 \text{ kg}$$

© The British Standards Institution 2017

7.6.3.4 To determine the velocity of vehicle or sled required:

$$v = \sqrt{\frac{2 \times E \times 105\%}{m}}$$

EXAMPLE:
Example for a vehicle or sled requiring a 15 000 J impact energy and a mass of 1 576 kg:

$$v = \sqrt{\frac{2 \times 15\,000 \times 105\%}{1\,576}} = 4.47 \text{ m/s}$$

7.6.3.5 Line-up the vehicle at a distance from the test barrier to allow for the desired velocity.

7.6.3.6 Using an acceleration method, accelerate the vehicle towards the test barrier target area.

NOTE *The vehicle may be accelerated into the barrier using:*

a) a winch to pull the vehicle that will disengage before impact on the test barrier;

b) something to push the vehicle, i.e. a person, a workplace vehicle or ram; or

c) a natural downward gradient to use gravitational energy.

7.6.3.7 The vehicle striker impacts against the test barrier at an angle of ±2 ° on the specified target point.

NOTE *Figure 29 shows an example of a vehicle impacting a test barrier.*

Figure 29 – Example of a vehicle impacting a test barrier

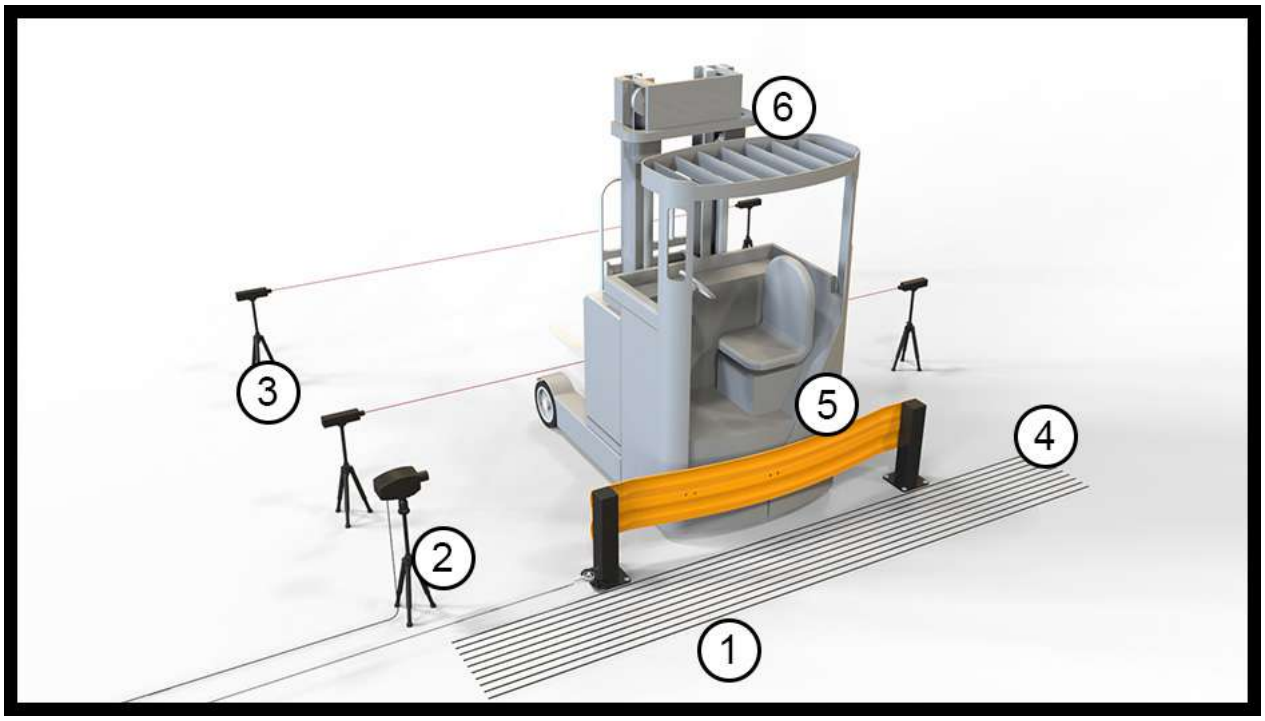

Key:
1. 3D image of a vehicle test procedure
2. High speed camera
3. Speed trap
4. Marked lines to measure deflection during impact
5. Test barrier
6. Vehicle

© The British Standards Institution 2017

7.6.3.8 Each time a different striker is used, the mass of the striker is independently weighed and recorded using scales.

7.6.3.9 Record the results of the impact tests in the test report.

7.7 Sled and ramp impact test

7.7.1 Apparatus

7.7.1.1 *Sled*, constructed of rigid material that allows maximum kinetic energy transfer to the test barrier, with resistance-free wheels that fit onto the ramp tracks.

NOTE *The sled wheels are designed to support the sled's maximum applicable weight and not suffer any obstruction during the roll downwards the inclined plane, so that it replicates the moving industrial vehicle.*

7.7.1.2 *Ramp*, a solid structure with an inclined plane at a pre-defined angle, with parallel tracks or rails integrated onto the ramp to guide the sled.

7.7.1.3 *Winch*, to pull the sled up to the desired height.

7.7.1.4 *Speed trap*, used to measure velocity, may be constructed of two mats or of two lasers.

NOTE *An example of sled and ramp is shown in Figure 30.*

Figure 30 – Example of a sled and ramp

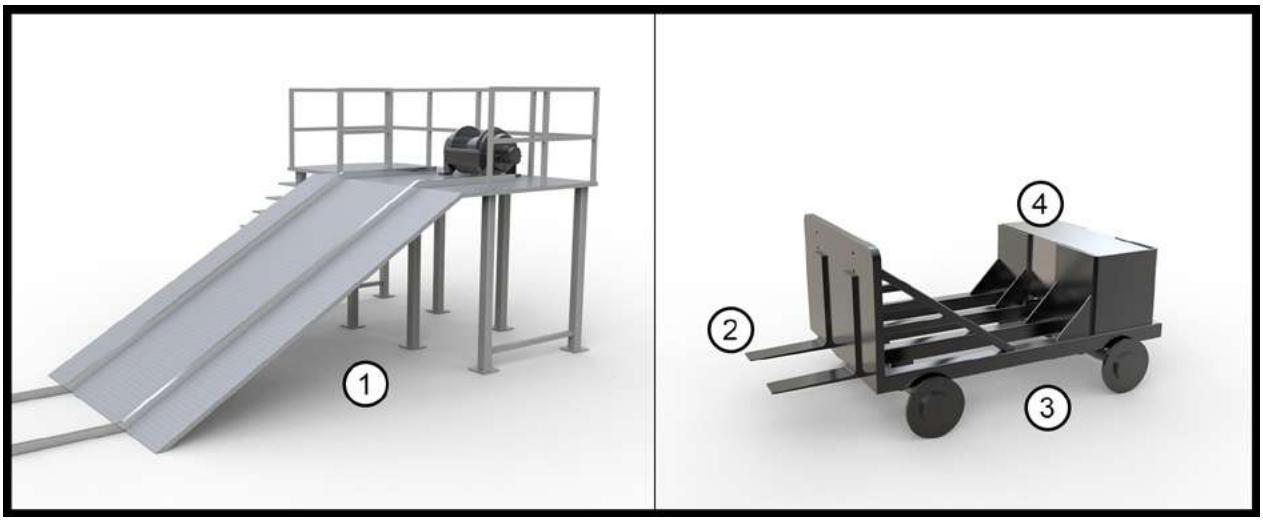

Key:
1. Ramp with guide tracks and winch
2. Forks striker
3. Sled
4. Weights

7.7.2 Sled and ramp impact test preparation

7.7.2.1 The sled is weighed on a commercial certified scale in order to determine its mass.

7.7.2.2 Select the bumper striker or two-fork striker depending on the test type chosen.

7.7.2.3 Secure or bolt the striker and make it integral to the sled.

© The British Standards Institution 2017

7.7.2.4 Weights can be added or removed from the sled and these are weighed on a commercial certified scale in order to determine the mass. The weights are bolted and made integral to the sled.

7.7.2.5 The test barrier is positioned and lined-up so that the sled striker will impact at the desired location on the test barrier.

NOTE *Figure 31 shows an example of sled and ramp impact test preparation area.*

Figure 31 – Example of a ramp and sled impact test preparation area

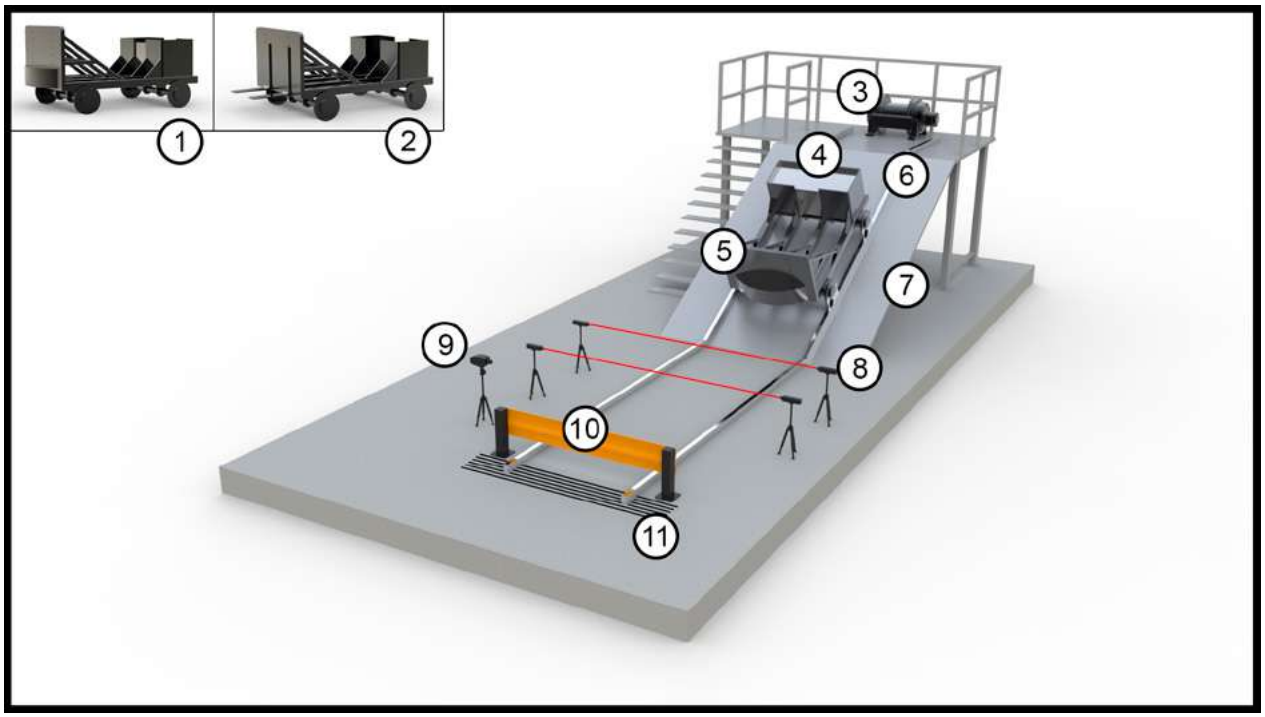

Key:
1. Sled with bumper striker
2. Sled with fork striker
3. Winch
4. Weights bolted and integral to the sled
5. Sled going down the ramp
6. Rails or track to guide the sled
7. Ramp
8. Speed trap
9. High speed camera
10. Test barrier
11. Marked lines to measure deflection during impact

7.7.2.6 The equipment to measure the velocity is set up; for example, a speed trap consisting of two mats or lasers is set up to capture the speed before impact.

7.7.3 Sled and ramp impact test procedure

7.7.3.1 Determine the sled mass and/or the sled impact speed required so as to measure and classify the performance of the barrier including the 5% safety factor.

NOTE *The calculation to determine the sled mass or the sled speed is the same as described in 7.6.3.1 for the vehicle impact test procedure.*

© The British Standards Institution 2017

7.7.3.2 The sled is pulled up the ramp by a winch to a height to allow for the desired velocity.

7.7.3.3 Disengage the winch allowing the sled to accelerate down the ramp towards the test barrier.

7.7.3.4 The sled striker impacts against the test barrier at an angle of ±2 ° on the specified target point.

NOTE Figure 32 shows an example of a sled impacting a test barrier.

Figure 32 – Example of a sled impacting a test barrier

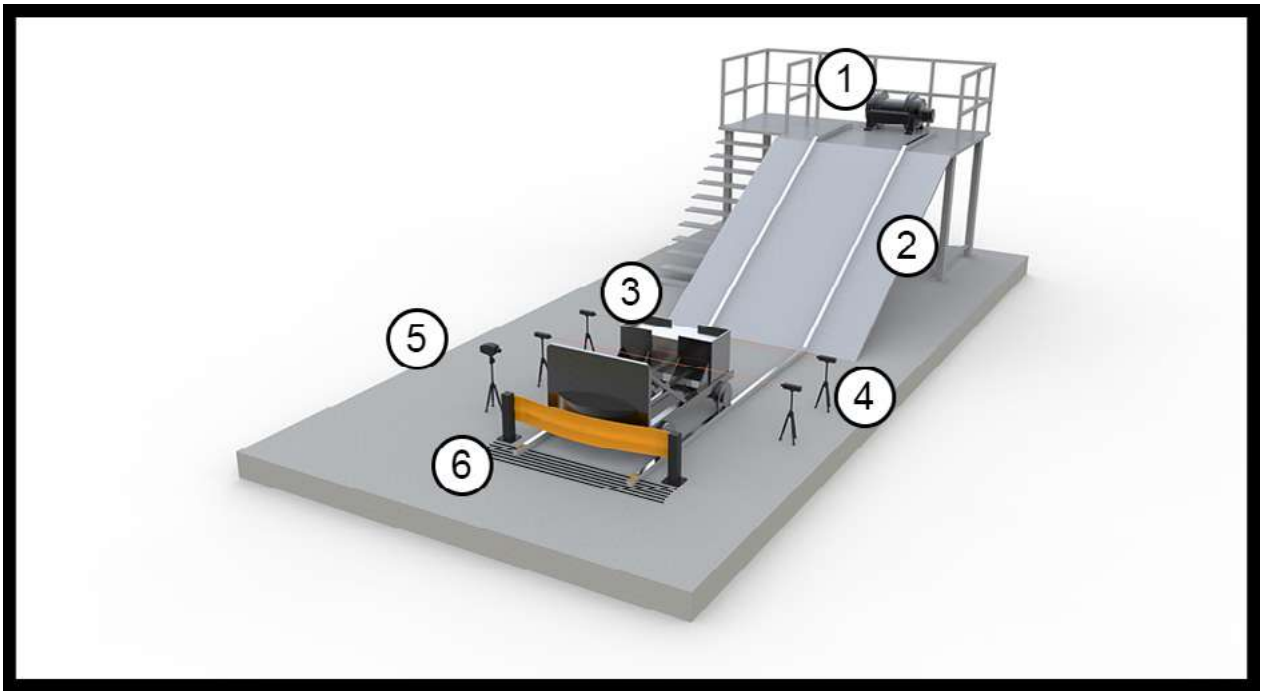

Key:
1. Winch
2. Tracks on the ramp to guide the sled
3. Weights on the sled
4. Speed trap
5. High speed camera
6. Impacted test barrier

7.7.3.5 Each time a different striker is used, the mass of the striker is independently weighed and recorded using scales.

7.7.3.6 Record the results of the impact tests in the test report.

7.8 Pass and fail criteria

7.8.1 Pass criteria for the test barrier:

a) the test barrier has arrested the striker;

b) the vehicle, sled or striker has not breached the test barrier;

c) there is no catastrophic failure in the test barrier after the test;

d) the fixture system is not damaged, remains in the substrate and has a lower tested pull-out force than the manufactured rated pull-out force.

© The British Standards Institution 2017

7.8.2 Fail criteria for the test barrier:

a) the test barrier does not arrest the striker, vehicle or sled;

b) the vehicle, sled or striker breaches the test barrier;

c) there is catastrophic failure within the test barrier;

NOTE *Catastrophic failure is when any component that is structurally integral to the test barrier is sheared or damaged beyond performance, even if the striker, vehicle or sled does not breach the barrier. Catastrophic failure is judged from a visual inspection and high speed camera recordings by the person compiling the test report. Sacrificial parts and cosmetic items are excluded.*

d) fixings fail because the tested measured force upon the fixings is higher than the manufacturer's rated pull-out force. The fixings also fail if they pull out of the floor or substrate.

7.9 Expression of results

7.9.1 The test data collected includes:

a) testing facility and environmental data;

b) test method and apparatus;

c) barrier and fixing system; and

d) results, including pass or fail, deflection, minor damage and description.

7.9.2 The data can be collated onto a test report (see Annex C for an example test report).

© The British Standards Institution 2017

Annex A (informative)
Emergency exit routes dimensions

Table A.1 shows the minimum width a pedestrian walkway leading to an emergency exit is to be in relation to the number of people using that route [4].

Table A.1 – Widths of escape routes and exits

Maximum number of persons	Minimum width (mm)
60	750
110	850
220	1 050
More than 220	5 mm per person

© The British Standards Institution 2017

Annex B (informative)
Guidance for typical vehicles in the workplace

B.1 Figures B.1 and B.2 provide guidance for the users to gain angles of impact and energy values from typical workplace vehicles without the need of exact figures and calculations.

B.2 Figure B.1 provides guidance on the maximum angle of impact for typical workplace vehicles, at a particular distance away from a safety barrier.

Figure B.1 – Vehicle impact angles in particular aisle widths

VEHICLES USED IN MATERIALS HANDLING & LOGISTICS

Product Type	Manual Pallet Truck	Electric Pedestrian Truck	Horizontal Order Picker	Electric Pedestrian Stacker	Lightweight Counterbalance Forklift Truck	Heavy Duty Counterbalance Forklift Truck	Engine Counterbalance Heavy Duty Forklift Truck	Electric High Reach Truck	Electric Tow Tractor	High Rack Stacker	Car	Small van	Small Lorry	Heavy Goods Lorry
Image	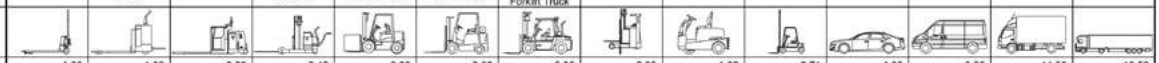													
a - Truck length (m)	1.20	1.80	3.20	2.40	2.80	3.80	5.85	2.32	1.82	3.71	4.80	6.00	11.50	16.50
d - Truck Width (m)	0.60	0.80	0.80	0.80	1.00	1.45	2.15	1.12	0.99	1.45	1.70	2.00	2.50	2.55
Pivot point	Middle	Middle	Middle	Middle	Middle	Side	Side	Middle	Middle	Middle	Side	Side	Side	Side
f - distance away from edge (m)	0.50	0.50	0.50	0.50	0.50	0.50	0.50	0.50	0.50	0.50	0.50	0.50	0.50	0.50
E - Impact Angle (°)	36.60	27.19	15.83	20.84	19.65	7.50	4.89	24.30	28.70	17.91	5.95	4.76	2.49	1.74
f - distance away from edge (m)	1.00	1.00	1.00	1.00	1.00	1.00	1.00	1.00	1.00	1.00	1.00	1.00	1.00	1.00
E - Impact Angle (°)	75.69	45.30	25.12	33.60	30.30	15.12	9.81	37.27	46.19	25.66	11.96	9.56	4.98	3.47

B.3 Figure B.2 provides guidance to help the user understand the energy that is transferred to a safety barrier by typical workplace vehicles at different angles.[2)]

Figure B.2 – Energy that is transferred to a safety barrier by vehicles at different angles

VEHICLES USED IN MATERIALS HANDLING & LOGISTICS

Product Type	Manual Pallet Truck	Electric Pedestrian Truck	Horizontal Order Picker	Electric Pedestrian Stacker	Lightweight Counterbalance Forklift Truck	Heavy Duty Counterbalance Forklift Truck	Engine Counterbalance Heavy Duty Forklift Truck	Electric High Reach Truck	Electric Tow Tractor	High Rack Stacker	Car	Small van	Small Lorry	Heavy Goods Lorry
Image	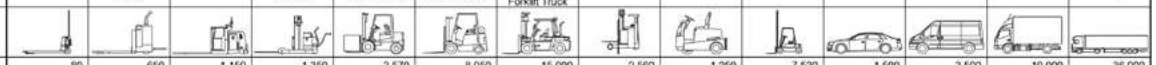													
Truck Weight (Kg)	80	650	1,150	1,350	2,570	8,050	15,000	2,560	1,250	7,530	1,500	3,500	10,000	36,000
Rated Load (Kg)	2,000	2,000	2,500	1,000	1,000	5,000	9,000	1,000	7,000	1,200				
Total weight (kg)	2,080	2,650	3,650	2,350	3,570	13,050	24,000	3,560	8,250	8,730	1,500	3,500	10,000	36,000
Speed (Km/h)	5	6	11	6	12	15	23	11	9	11	16	10	10	10
Speed (m/s)	1.39	1.67	3.06	1.67	3.33	4.17	6.25	3.06	2.36	2.92	4.44	2.78	2.78	2.78
90° Angle Impact Energy - joules (J)	2,006	3,681	17,039	3,264	19,833	113,281	468,750	16,619	22,996	37,133	14,815	13,503	38,580	138,889
67.5° Angle Impact Energy - joules (J)	1,712	3,142	14,544	2,786	16,929	96,692	400,103	14,185	19,629	31,695	12,645	11,526	32,930	118,549

[2)] For guidance on speeds and fork lift trucks, see *http://fork-truck.org.uk/uploads/uploads/fact_sheets/FS_25.pdf*

© The British Standards Institution 2017

Annex C (informative)
Example of a test barrier report

C.1 The data required to be collected when testing a safety barrier may be compiled on a report. The data includes the test barrier's deflection, force on the fixings, damage and whether it passes or fails the test.

C.2 Table C.1 provides an example of a test barrier report.

Table C.1 – Example test barrier report

Date	
Test method	
Description of test barrier	
Environment temperature	
Humidity	
Kinetic energy applied to the safety barrier	
Mass used	
Striker used	
Test 1 equipment details	
Test 2 equipment details	
Test co-ordinator/organization	

Fixing data – Give reason, if not applicable:

Fixing type and component used on	Fixing manufacturer	Manufacturers rated pull-out force	Measured force on fixings	Fixings pass or fail

Test results:

Barrier tests	Impact height	Deflection	Non integral minor damage and comments	State pass or fail	Comments
End post					
Mid post					
Mid rail					
Stand-alone barrier	**Impact height**	**Deflection**	**Non integral minor damage and comments**	**State pass or fail**	**Comments**
Post					

© The British Standards Institution 2017

Bibliography

Standards publications

For dated references, only the edition cited applies. For undated references, the latest edition of the referenced document (including any amendments) applies.

BS EN ISO 9001, *Quality management systems – Requirements*

Other publications

[1] HEALTH AND SAFETY EXECUTIVE. *Workplace transport safety, A brief guide*, INDG199 (rev2), 2013.

[2] HEALTH AND SAFETY EXECUTIVE. *Workplace transport, Guide.* November 2013, British Safety Council: A guide to workplace transport safety, HSG136 (3rd edition) 2014.

[3] HEALTH AND SAFETY EXECUTIVE. *Warehousing and storage, A guide to health and safety*, HSG76, 2007.

[4] FIRE ADVICE SAFETY CENTRE. "Basic Means of Escape from Fire", April 2011, last updated December 17, 2015, *www.firesafe.org.uk/basic-means-of-escape-from-fire/*

[5] HEALTH AND SAFETY EXECUTIVE. *Hygienic Design of Machinery in the food and drink industries*. Food Information Sheet No 24, 2008.

[6] THE CONSTRUCTION FIXINGS ASSOCIATION. *Everything you need to know about drilled in fixings and anchors for concrete, masonry & plasterboard*, 2012.

Further reading

Speed and Forklift Trucks, Fork Lift Truck Association. Fact Sheet 25.[3]

The British Safety Council.[4]

The Institution of Occupational Safety and Health.[5]

[3] *http://fork-truck.org.uk/uploads/uploads/fact_sheets/FS_25.pdf.*
[4] *www.britsafe.org.*
[5] *www.iosh.co.uk.*

© The British Standards Institution 2017

British Standards Institution (BSI)

BSI is the national body responsible for preparing British Standards and other standards-related publications, information and services.

BSI is incorporated by Royal Charter. British Standards and other standardization products are published by BSI Standards Limited.

About us

We bring together business, industry, government, consumers, innovators and others to shape their combined experience and expertise into standards -based solutions.

The knowledge embodied in our standards has been carefully assembled in a dependable format and refined through our open consultation process. Organizations of all sizes and across all sectors choose standards to help them achieve their goals.

Information on standards

We can provide you with the knowledge that your organization needs to succeed. Find out more about British Standards by visiting our website at bsigroup.com/standards or contacting our Customer Services team or Knowledge Centre.

Buying standards

You can buy and download PDF versions of BSI publications, including British and adopted European and international standards, through our website at bsigroup.com/shop, where hard copies can also be purchased.

If you need international and foreign standards from other Standards Development Organizations, hard copies can be ordered from our Customer Services team.

Subscriptions

Our range of subscription services are designed to make using standards easier for you. For further information on our subscription products go to bsigroup.com/subscriptions.

With **British Standards Online (BSOL)** you'll have instant access to over 55,000 British and adopted European and international standards from your desktop. It's available 24/7 and is refreshed daily so you'll always be up to date.

You can keep in touch with standards developments and receive substantial discounts on the purchase price of standards, both in single copy and subscription format, by becoming a **BSI Subscribing Member**.

PLUS is an updating service exclusive to BSI Subscribing Members. You will automatically receive the latest hard copy of your standards when they're revised or replaced.

To find out more about becoming a BSI Subscribing Member and the benefits of membership, please visit bsigroup.com/shop.

With a **Multi-User Network Licence (MUNL)** you are able to host standards publications on your intranet. Licences can cover as few or as many users as you wish. With updates supplied as soon as they're available, you can be sure your documentation is current. For further information, email bsmusales@bsigroup.com.

Revisions

Our British Standards and other publications are updated by amendment or revision.

We continually improve the quality of our products and services to benefit your business. If you find an inaccuracy or ambiguity within a British Standard or other BSI publication please inform the Knowledge Centre.

Copyright

All the data, software and documentation set out in all British Standards and other BSI publications are the property of and copyrighted by BSI, or some person or entity that owns copyright in the information used (such as the international standardization bodies) and has formally licensed such information to BSI for commercial publication and use. Except as permitted under the Copyright, Designs and Patents Act 1988 no extract may be reproduced, stored in a retrieval system or transmitted in any form or by any means – electronic, photocopying, recording or otherwise – without prior written permission from BSI. Details and advice can be obtained from the Copyright & Licensing Department.

Useful Contacts:

Customer Services
Tel: +44 845 086 9001
Email (orders): orders@bsigroup.com
Email (enquiries): cservices@bsigroup.com

Subscriptions
Tel: +44 845 086 9001
Email: subscriptions@bsigroup.com

Knowledge Centre
Tel: +44 20 8996 7004
Email: knowledgecentre@bsigroup.com

Copyright & Licensing
Tel: +44 20 8996 7070
Email: copyright@bsigroup.com

BSI, 389 Chiswick High Road
London W4 4AL
United Kingdom
www.bsigroup.com

ISBN 978-058087-605-9